TECHNICAL GUIDANCE

Metal Tube Type Variable Area Flowmeter

NLZ Series

OUTLINE

The **NLZ series** is a compact, metal tube type variable area flowmeter with a face-to-face dimension of 250 mm.
This series consists of NLZ1000 (general type and intrinsically safe type) and NLZ2000 (flameproof type). Each model has various types including a local indication without power supply type and a HART® communication type. The NLZ series can measure flow rates of any processes and devices.
The standard material for the wetted parts is 316L stainless steel. Fluororesin lining is also available for highly corrosive fluids. As optional indicator and transmitter functions, alarm output, 4–20 mA DC output and HART® communication can be added. The NLZ series has acquired JPN, ATEX, IECEx, NEPSI, and KOSHA explosionproof certifications.

NLZ1000

NLZ2000

NLZ2000/SC
(Stainless steel indicator)

FEATURES

❑ Unified face-to-face dimension
The face-to-face dimension is unified to 250 mm for all connection sizes from 15 mm to 100 mm, which allows for easy piping design.

❑ Explosionproof
Intrinsically safe construction: NLZ1000 series
Flameproof construction: NLZ2000 series

■ Metal tube type

❑ Accepts a wide variety of fluids
This type can measure various fluids such as liquid, gas, and steam.

❑ Accepts corrosive fluid
As standard, this type uses highly corrosion-resistant 316L SS or equivalent.

■ Lining type

❑ Uses denatured PTFE for metal tube lining

❑ Excellent resistance to chemicals, infiltration, and stress cracking

STANDARD SPECIFICATIONS

■ Metal tube type

● Meter size : 15, 25, 40, 50, 80, 100 mm

● Connection rating (flange connection)
: JIS10K, 20K RF
ANSI Class 150, 300RF

Flowmeters for high pressures can be made. Contact us for details.

Note: JIS10K flanges with a connection size of 15 mm to 40 mm are made of JIS 20K. JIS20K flanges are 2 mm thicker but other dimensions are the same as those of JIS10K flanges (see the table below).

● Connection size

Meter size	Connection rating	Available connection sizes			
		1 rank smaller than the meter size	Same as the meter size	1 rank larger than the meter size	2 ranks larger than the meter size
15	10K	N/A	15 *	20 *	25 *
	20K	N/A	15	20	25
	Class 150	N/A	15	20	25
	Class 300	N/A	15	20	Consult us
25	10K	N/A	25 *	40 *	50
	20K	N/A	25	40	Consult us
	Class 150	N/A	25	40	50
	Class 300	N/A	25	40	Consult us
40	10K	N/A	40 *	50	65
	20K	N/A	40	50	Consult us
	Class 150	N/A	40	50	65
	Class 300	N/A	40	50	Consult us
50	10K	N/A	50	65	80
	20K	N/A	50	65	Consult us
	Class 150	N/A	50	65	80
	Class 300	N/A	50	65	Consult us
80	10K	N/A	80	100	125
	20K	N/A	80	100	Consult us
	Class 150	N/A	80	100	125
	Class 300	N/A	80	N/A	N/A
100	10K	N/A	100	125	150
	20K	N/A	100	Consult us	Consult us
	Class 150	N/A	100	125	150
	Class 300	N/A	Consult us	N/A	N/A

Consult us regarding the availability of the sizes marked “Consult us” and other sizes not shown in the table.

● Measuring fluids : Liquid, gas, steam

● Fluid temperature : –20 to +300°C (local indication type)
–20 to +200°C (transmitter type)
For explosionproof types, see each safety class in the table below.

● Fluid pressure : 4.1 MPa at ambient temperature
3.3 MPa at 120°C
Although the maximum allowable operating pressure complies with JIS and ASME/ANSI flange standards, it depends on fluid temperature.
Contact us for details.

● Materials : 316L SS or equivalent for the wetted parts

● Flow rate range : 0.04 to 100 m^3/h
(For liquids with density of 1.0 g/cm^3, viscosity of 1.0 mPa·s)
1.2 to 600 m^3/h (nor)
(For gases at 0°C and 0 MPa [1 atm])

● Accuracy : ±1.5% F.S.

● Rangeability : 10 : 1

■ Lining type

● Meter size : 20, 25, 40, 50, 80, 100 mm

● Connection rating (flange connection only)
: JIS10K, 20K RF or equivalent
ANSI Class 150, 300RF or equivalent
Some meter sizes use thicker flanges than the standards.

● Measuring fluids : Liquid

● Fluid temperature : –20 to +120°C
For explosionproof types, see each safety class in the table below.

● Fluid pressure : 4.1 MPa at ambient temperature
3.3 MPa at 120°C
Although the maximum allowable operating pressure complies with JIS and ASME/ANSI flange standards, it depends on fluid temperature.
Negative pressure of up to –0.06 MPa is allowable.

● Materials : Denatured PTFE, PFA, or PTFE for the wetted parts
For details, see EXTERNAL DIMENSIONS.

● Flow rate range : 0.15 to 50 m^3/h
(For liquids with density of 1.0 g/cm^3, viscosity of 1.0 mPa·s)

● Accuracy : ±2.0% F.S.

● Rangeability : 10:1 (10:2 for flow rates less than 0.3 m^3/h)

■ Indicator

1. NLZ1000 series (general type, intrinsically safe type)

● Ambient temperature : –25 to 100°C (local indication type)
See the description of each transmitter for the transmitter type.
See the description of each transmitter for the explosionproof type.

● Ambient humidity : 95%RH or lower

● Protection class : IP65/67

● Painting : Polyester resin

● Color : Munsell 9.4B4.7/3 (indicator cover)
Munsell N1.5 (indicator base)

2. NLZ2000 series (flameproof type)

● Ambient temperature : –20 to 60°C

● Ambient humidity : 95%RH or lower

● Protection class : IP65/67

● Painting : Polyester resin

● Color : Munsell 9.4B4.7/3 (indicator cover)
Munsell N1.5 (indicator base)

FUNCTIONS

■ NLZ□□□□/R□SERIES (REED SWITCH TYPE ALARM)

NLZ□□□□/R□ is a local indication type with a reed switch as a contact for flow alarms. In addition to flow rate indication, it outputs alarm signals at the SPST contact.
Intrinsically safe types and flameproof types are available.

● Transmitter specifications

Alarm point	: 1
Contact system	: Reed switch (a or b contact/SPST)
Rating	: 10 VA AC, 10 W DC as resistance load Max. 125 V AC/0.5 A or Max. 100 V DC/0.5 A
Setting accuracy	: ±2.0% F.S. (against flow scale)
Reset span	: Less than 15% F.S. or 20% F.S. (against flow scale)
Cable entry	: M20 × 1.5, G1/2, NPT1/2
Construction (optional)	: Intrinsically safe or flameproof (see page 4 for details)
Ambient temperature	: General type –20 to 60°C Intrinsically safe –20 to 60°C Flameproof –20 to 60°C
Insulation resistance	: 100 MΩ or more/500 V DC (between power supply terminals and the indicator case)
Withstand voltage	: 1500 V AC/1 min (between power supply terminals and the indicator case)

● Intrinsically safe type specifications

Max. input voltage	: 30 V DC
Max. input current	: 500 mA

■ NLZ□□□□/N□SERIES (PROXIMITY SENSOR TYPE ALARM)

NLZ□□□□/N□ is a local indication type with a proximity sensor as a contact for flow alarms. In addition to flow rate indication, it outputs alarm signals complying with the NAMUR standard.
Intrinsically safe types and flameproof types are available.

● Transmitter specifications

Alarm point	: 2 (NLZ1000/high alarm, low alarm, or high and low alarm) 1 (NLZ2000/high alarm or low alarm)
Switch	: Proximity sensor
Contact output	: Complying with NAMUR (ON: 1 mA or less, OFF: 3 mA or more)
Setting accuracy	: ±2.0% F.S. (against flow scale)
Reset span	: Less than 1.5% F.S. (against flow scale)
Cable entry	: M20 × 1.5, G1/2, NPT1/2
Construction (optional)	: Intrinsically safe or flameproof (see page 4 for details)
Ambient temperature	: General type –20 to 60°C Intrinsically safe –20 to 60°C Flameproof –20 to 60°C
Insulation resistance	: 100 MΩ or more/500 V DC (between power supply terminals and the indicator case)
Withstand voltage	: 500 V DC/1 min (between power supply terminals and the indicator case)

● Intrinsically safe type specifications

Max. input voltage	: 16 V DC
Max. input current	: 52 mA
Max. input power	: 169 mW
Max. internal capacitance	: 150 nF
Max. internal inductance	: 150 μH

■ NLZ□□□□/E□SERIES (ELECTRIC TRANSMITTER)

■ NLZ□□□□/H□SERIES (ELECTRIC TRANSMITTER & HART® COMMUNICATION)

NLZ□□□□/E□ is a local indication type with an electric transmitter. In addition to flow rate indication, it outputs 4–20 mA DC current.
In addition to the function above, NLZ□□□□/H□ allows for HART® communication, which complies with the multi-drop specification.
Intrinsically safe types and flameproof types are available.

● Transmitter specifications

Power supply voltage	: 10 to 30 V DC (Voltage between transmitter terminals) 10 to 28 V DC for intrinsically safe types
Output	: 4 to 20 mA
Effective output range	: 4.0 to 21.6 mA 22.8 mA at abnormal conditions 3.75 mA can be output in special specifications
Allowable load resistance	: Up to 830Ω (up to 580Ω/24 V DC) for NLZ□□□□/E□ 230 to 830Ω for NLZ□□□□/H□ At least 230Ω is necessary for HART® communication. Use the following formula to determine the allowable load resistance for each supply voltage. Allowable load resistance ≤ (power supply voltage [V] – 10) / 0.024Ω Note that this value includes the load resistance of wiring.
Output accuracy	: ±1.0% F.S. (against flow scale)
Low cut off	: 0 to 20% F.S. (default: 7% F.S.)
Damping	: 0 to 20 sec (default: 1 sec)
Cable entry	: M20 × 1.5, G1/2, NPT1/2
Construction (optional)	: Intrinsically safe or flameproof (see page 4 for details)
Ambient temperature	: General type –20 to 60°C Intrinsically safe –20 to 60°C Flameproof –20 to 60°C
Insulation resistance	: 20 MΩ or more/500 V DC (between power supply terminals and the indicator case)
Withstand voltage	: 500 V AC/1 min (between power supply terminals and the indicator case)

● Intrinsically safe type specifications

Max. input voltage	: 28 V DC
Max. input current	: 93 mA DC
Max. input power	: 650 mW
Max. internal capacitance	: 5 nF
Max. internal inductance	: 0.2 mH

■ NLZ1□□□/□□/□I SERIES (INTRINSICALLY SAFE CONSTRUCTION)

	Explosionproof class
ATEX	Ⅱ1G Ex ia ⅡC T3...T6 Ga
NEPSI	Ex ia ⅡC T3...T6 Gb
IECEx	Ex ia ⅡC T3/T6 Ga

Temperature class	Max. fluid temperature	
	ATEX , IECEx	NEPSI
T6	85°C	70°C
T5	100°C	80°C
T4	135°C	120°C
T3	200°C	180°C

■ NLZ2□□□/□□/□E SERIES (FLAMEPROOF CONSTRUCTION)

	Explosionproof class
ATEX	Ⅱ2G Ex db ⅡC T6...T2 Gb Ⅱ2D Ex tb ⅢC T95°C...T210°C Db
NEPSI	Ex db ⅡC T2...T6 Gb Ex tb ⅢC T95°C...T210°C Db
KOSHA	Ex d ⅡC T6...T2
	Ex tD A21 IP65/67 T95°C...T210°C
IECEx	Ex db ⅡC T6...T2 Gb Ex tb ⅢC T95°C...T210C Db
JPN Ex	Ex db ⅡC T6...T2 Gb Ex tb ⅢC T95°C...T210C Db

Temperature class	Max. fluid temperature
	ATEX, NEPSI, KOSHA, IECEx
T6	70°C
T5	90°C
T4	125°C
T3	190°C
T2	200°C

Temperature code (dust)	Max. fluid temperature
	ATEX, NEPSI, KOSHA, IECEx
95°C	85°C
110°C	100°C
145°C	135°C
195°C	185°C
210°C	200°C

ADDITIONAL FUNCTIONS

■ Cable entry

Select an appropriate cable entry from MODEL CODE.

■ Damper device

All sizes of metal tube types for gas measurement are equipped with a damper as standard. The damper device can also be added for measuring a liquid with pulsation.
The use of a damper device is not recommended for chlorine gas that easily forms chemical compounds and fluids containing rust, debris and oil because these may hinder the function of the device

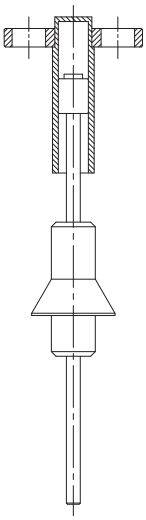

FLOW RATE TABLE

■ Metal tube type

Meter size	Water		Air	
	Flow rate (m^3/h)	Max. pressure loss (kPa)	Flow rate (m^3/h) (nor)	Max. pressure loss (kPa)
15	0.04 to 2.0	15	1.2 to 45	25
25	1.5 to 5.4	20	45 to 135	36
	5.4 to 6.0 ∗	24		
40	5.0 to 10.5	9	130 to 230	22
50	9.0 to 16.8	13	220 to 300	9
	16.8 to 21.5 ∗	19	300 to 400 ∗	14
80	20 to 40	27	390 to 600 ∗	18
	40 to 50 ∗	40		
100	50 to 100 ∗	32	—	—

Flow rate ranges marked with ∗ have an alarm reset span of 20% of F.S.
Flow rates in the table above are values converted into those of water (density: 1.0 g/cm³, viscosity: 1.0 mPa·s) or air (at 0°C, 0 MPa [1 atm]). These values are the flow range in the maximum graduation.

❑ How to convert flow rates

1. Liquid applications

Regarding liquid applications, flow rates in the flow rate table above are those of water (density: 1.0 g/cm³, viscosity: 1.0 mPa·s). If actual fluid conditions are different, it is necessary to convert flow rates with the following formula.

$$Qw=Q\times 2.59 \Big/ \sqrt{((7.7/\rho)-1)}$$

Qw : Water-converted flow rate (m^3/h)
Q : Flow rate of actual liquid (m^3/h)
ρ : Density of actual liquid (g/cm^3)

Consult us about high viscosity applications.

2. Gas applications

Regarding gas applications, flow rates in the flow rate table above are those of air at 20°C, 0 MPa (1 atm). If actual fluid conditions are different, it is necessary to convert flow rates with the following formula.

$$QA=Q\times 0.01635\times \sqrt{(\rho\times(273+t)\ /\ (0.1013+P))}$$

QA : Air-converted flow rate at 0°C, 0 MPa [m^3/h (nor)]
Q : Flow rate of actual gas [m^3/h (nor)]
ρ : Density of actual gas [kg/m^3 (nor)]
P : Operating pressure (MPa)
t : Operating temperature (°C)

3. Steam applications

Steam flow rates are converted into those of air (at 0°C, 0 MPa) with the following formula.

$$QA=0.8488\times Q_{s1}/\sqrt{\rho s}$$
$$QA=0.8488\times Q_{s2}\times\sqrt{\rho s}$$

QA : Air-converted flow rate at 0°C, 0 MPa [m^3/h (nor)]]
Q_{s1} : Flow rate of steam (mass) (unit: kg/h)
Q_{s2} : Flow rate of steam (volume) (unit: m^3/h)
ρs : Density of steam (kg/m^3)

■ Lining type

Meter size	Water	
	Flow rate (m^3/h)	Max. pressure loss (kPa)
20	0.15 to 1.2 Note	9
25	0.7 to 3.5	14
40	3.0 to 6.0	6
50	5.0 to 15.0	11
80	10.0 to 25.0	12
100	20.0 to 50.0	10

Flow rates in the table above are values converted into those of water (density: 1.0 g/cm³, viscosity: 1.0 mPa·s). These values are the flow range in the maximum graduation.
Note: The flow range will be 10:2 for flow rates less than 0.3 m^3/h.

❑ How to convert flow rates

Flow rates in the flow rate table above are those of water (density: 1.0 g/cm³, viscosity: 1.0 mPa·s). If actual fluid conditions are different, it is necessary to convert flow rates with the following formula.

$$Qw=Q\times 2 \Big/ \sqrt{((5/\rho)-1)}$$

Qw : Water-converted flow rate (m^3/h)
Q : Flow rate of actual liquid (m^3/h)
ρ : Density of actual liquid (g/cm^3)

Consult us about high viscosity applications.

EXTERNAL DIMENSIONS

■ Metal tube type

NLZ1000

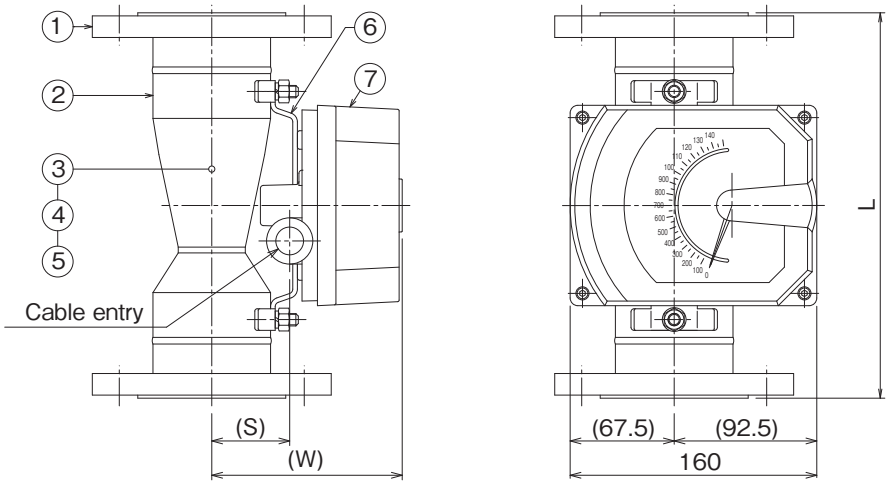

NLZ2000

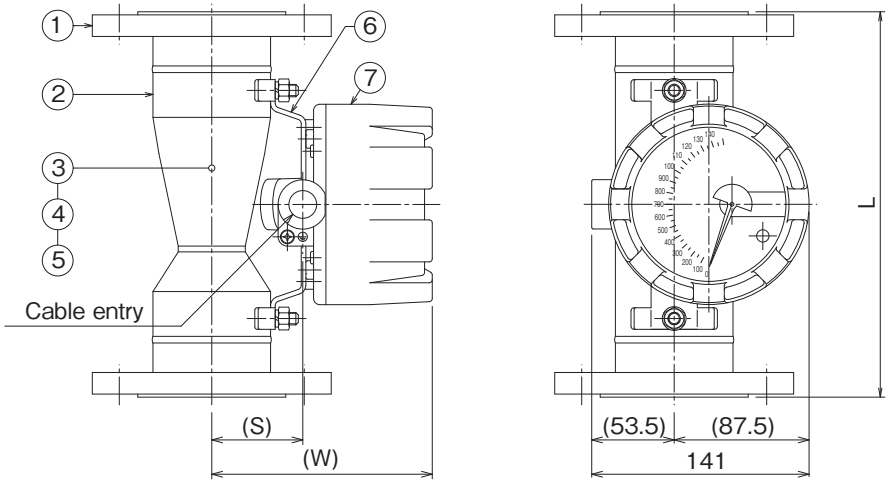

Materials

No.	Description	Material
1	Flange	316L SS
2	Tapered tube	316L SS / SCS16
3	Float guide	316L SS
4	Stop ring	316L SS
5	Float	316L SS
6	Fittings	316 SS
7	Indicator	ADC12

Note:
- The upper float guide is replaced with the damper (cylinder) for gas and steam services or other services where a damper is required.
- The lower float guides fixed to the flanges of 15 mm and 100 mm meter size cannot be removed.

External dimensions

Meter size	Connection size (mm) (inch)	Dimensions (mm)	NLZ1000			NLZ2000		
			Dimensions (mm)		Approx. mass (kg) *	Dimensions (mm)		Approx. mass (kg) *
		L	S	W		S	W	
15	15 (1/2)	250	50.5	123.5	3.0	53.5	137.5	3.5
25	25 (1)	250	50.5	123.5	4.5	53.5	137.5	5.0
40	40 (1-1/2)	250	50.5	123.5	5.0	53.5	137.5	5.5
50	50 (2)	250	50.5	123.5	7.5	53.5	137.5	8.0
80	80 (3)	250	52.5	125.5	13.5	55.5	139.5	14.0
100	100 (4)	250	69.5	142.5	18.5	72.5	156.5	19.0

* Approximate mass is for ANSI Class 150.

EXTERNAL DIMENSIONS

■ Lining type

NLZ1000

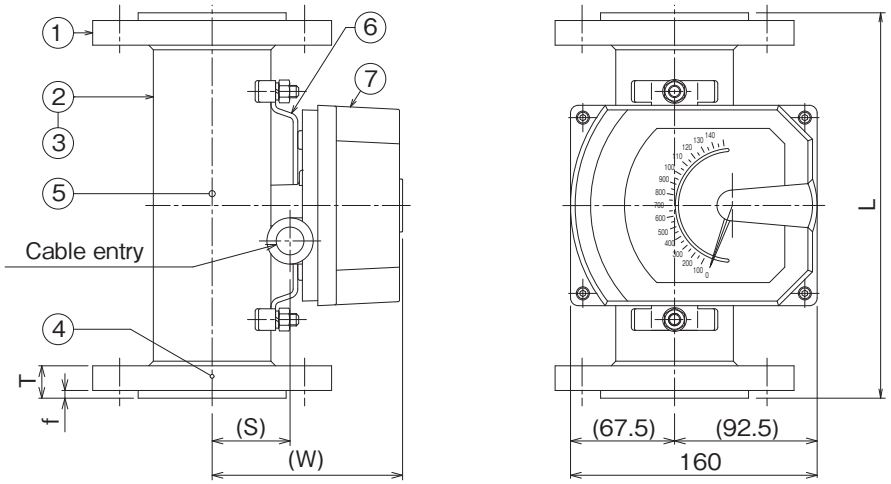

NLZ2000

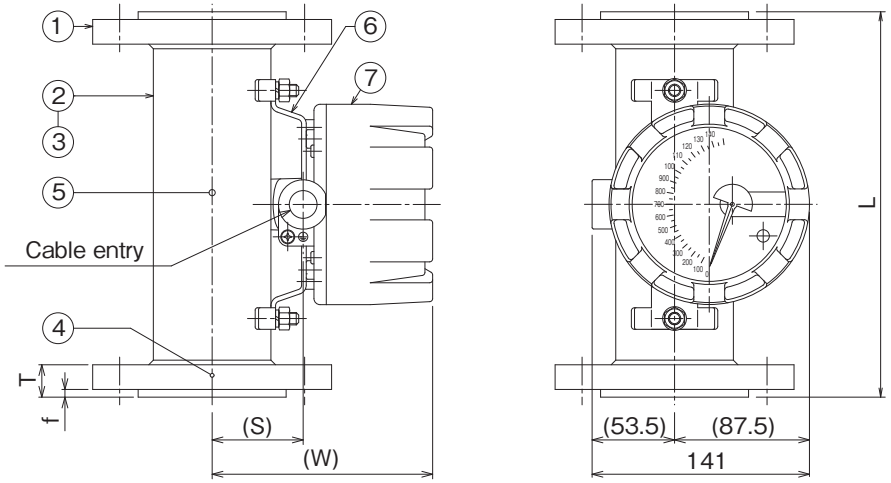

Materials

No.	Description	Material
1	Flange	316 SS
2	Main body	316 SS
3	Main body lining	Denatured PTFE
4	Float guide	PFA
5	Float	PFA or PTFE/PFA
6	Fittings	316 SS
7	Indicator	ADC12

External dimensions

Meter size	Dimensions (mm)			NLZ1000			NLZ2000		
				Dimensions (mm)		Approx. mass (kg) *3	Dimensions (mm)		Approx. mass (kg) *3
	L	T *1 (same size)	f *2	S	W		S	W	
20	250	19	5 (3)	19.0	92.0	4.5	22.0	106.0	5.0
25	250	19	5 (3)	50.5	123.5	5.5	53.5	137.5	6.0
40	250	21	5 (3)	50.5	123.5	7.0	53.5	137.5	7.5
50	250	21	5 (3)	50.5	123.5	9.5	53.5	137.5	10.0
80	250	22	6 (4)	52.5	125.5	14.5	55.5	139.5	15.0
100	250	22	6 (4)	69.5	142.5	21.5	72.5	156.5	22.0

*1 The thickness of the flange (T) depends on the flange rating (values in the table are for the same size as JIS10K). Confirm details in the approval drawing and select a bolt with an appropriate length.
*2 Values in parentheses are applicable to ANSI Class 150/300.
*3 Approximate mass is for a flange with the same size as JIS10K.

MODEL CODE

1. Main body

❏ Metal tube type

NLZ	＊	＊	＊	＊	- ＊＊	＊＊	＊	- ＊	＊	＊	＊	/ ＊＊	Specifications	Restriction on selection: Liquid	Restriction on selection: Gas
Indicator type	1												Non-explosionproof or intrinsically safe construction	See MODEL CODE of NLZ1000 series.	
	2												Flameproof construction	See MODEL CODE of NLZ2000 series.	
Main body		1											Metal tube type	Fixed code	
Wetted parts material			1										316L SS / SCS16		
Float material				1									316L SS		
Connection rating					-J1								JIS 10K	See “Available connection sizes” on Page 2.	
					-J4								JIS 20K		
					-A2								ANSI Class 150		
					-A5								ANSI Class 300		
Flange face						RF							RF flange	Fixed code	
Connection size							1						15A 1/2"	Available connection sizes are the same as the meter size, or 1 or 2 ranks larger than the meter size. For details, see “Available connection sizes” on Page 2.	
							2						20A 3/4"		
							3						25A 1"		
							4						40A 1-1/2"		
							5						50A 2"		
							6						65A 2-1/2"		
							7						80A 3"		
							8						100A 4"		
							9						125A 5"		
							A						150A 6"		
Meter size								-1					15A	Qw (m^3/h) Water at 20°C: 0.04 to 2.0	QA (m^3/h) (nor) Air at 20°C, 0 MPa: 1.2 to 45
								-3					25A	1.5 to 6.0	45 to 135
								-4					40A	5.0 to 10.5	130 to 230
								-5					50A	9.0 to 21.5	220 to 400
								-7					80A	20.0 to 50.0	390 to 600
								-8					100A	50.0 to 100.0	
Tapered tube									＋				Tapered tube model number	Fixed code (manufacturer’s code)	
Float										＋			Float model number		
Damper											1		Not provided	Standard	N/A
											2		Provided	Contact us.	Standard
Additional functions for the indicator												/ ＊＊		See MODEL CODE of the indicator.	

MODEL CODE

❏ Lining type

NLZ	＊	＊	＊	＊	- ＊＊	＊＊	＊	- ＊	＊	＊	＊	/ ＊＊	Specifications	Restriction on selection
Indicator type	1												Non-explosionproof or intrinsically safe construction	See MODEL CODE of NLZ1000 series.
	2												Flameproof construction	See MODEL CODE of NLZ2000 series.
Main body		L											Lining type	Fixed code
Wetted parts material			F										Denatured PTFE lining	
Float material				F									PFA lining or PFA/PTFE	
Connection rating					-J1								JIS 10K or equivalent	Applicable to all types
					-J4								JIS 20K or equivalent	
					-A2								ANSI Class 150 or equivalent	
					-A5								ANSI Class 200 or equivalent	
Flange face						RF							RF flange	Fixed code
Connection size							2						20A 3/4"	Available connection sizes are the same as the meter size, or 1 rank larger than the meter size.
							3						25A 1"	
							4						40A 1-1/2"	
							5						50A 2"	
							6						65A 2-1/2"	
							7						80A 3"	
							8						100A 4"	
							9						125A 5"	
Meter size								-2					20A	Qw (m^3/h) Water at 20°C: 0.15 to 1.2 ＊ ＊The range is 10 : 2 for flow rates less than 0.3 m^3/h.
								-3					25A	0.7 to 3.5
								-4					40A	3.0 to 6.0
								-5					50A	5.0 to 15.0
								-7					80A	10.0 to 25.0
								-8					100A	20.0 to 50.0
Tapered tube									＋				Tapered tube model number	Fixed code (manufacturer's code)
Float										＋			Float model number	
Damper											1		Not provided	Fixed code
Additional functions for the indicator												/ ＊＊		See MODEL CODE of the indicator.

MODEL CODE

2. Indicator option code

❑ NLZ1000 series

NLZ	＊	＊	＊	＊	- ＊ ＊	＊ ＊	＊	- ＊	＊	＊	＊	/ ＊＊	Specifications	Restriction on selection	
Indicator type	1												Non-explosionproof or intrinsically safe construction		
Main body code		＊	＊	＊	- ＊ ＊	＊ ＊	＊	- ＊	＊	＊	＊			See MODEL CODE of the main body	
Additional function			Alarm contact output: Reed switch (1 point)									/RA	1 point alarm (high close)	Multi-selection is not possible.	Symbols after “/NW” specify switch actions. A: High close B: High open C: Low close D: Low open Example: “/NWAB” means high alarm close × 1 and high alarm open × 1.
												/RB	1 point alarm (high open)		
												/RC	1 point alarm (low close)		
												/RD	1 point alarm (low open)		
			Alarm contact output: Proximity sensor (1 or 2 points)									/NA	1 point alarm (high close)		
												/NB	1 point alarm (high open)		
												/NC	1 point alarm (low close)		
												/ND	1 point alarm (low open)		
												/NW	2 points alarm		
			Current output (2-wire system with 4–20 mA DC output)									/E1	Electrical transmitter		Specify “/ □ 2” for intrinsic safety types.
												/E2	Electrical transmitter (intrinsically safe)		
			Current output with HART® communication (2-wire system with 4–20 mA DC output with HART® communication)									/H1	Electrical transmitter with HART® communication		
												/H2	Electrical transmitter with HART® communication (intrinsically safe)		
			Explosion-proof approval (Ex i)									/EI	ATEX	Multi-selection is not possible.	
												/CI	NEPSI		
												/XI	IECEx		
			Cable entry									/M2	M20 × 1.5（F）	Multi-selection is not possible.	
												/GH	G1/2（F）		
												/NP	NPT1/2（F）		
Option			Washing									/OL	Degrease treatment	No restriction	
												/WL	Non-water treatment		
												/AP	Pickling treatment		
			Inspection									/AT	Airtightness inspection	No restriction	
			Accessories									/PC	Waterproof connector		
												/AC	Provided	IR series, amplifier for alarm, etc.	

MODEL CODE

❑ NLZ2000 series

NLZ	＊	＊	＊	＊	- ＊ ＊	＊ ＊	＊	- ＊	＊	＊	＊	/ ＊＊	Specifications	Restriction on selection
Indicator type	2												Flameproof construction	
Main body code		＊	＊	＊	- ＊ ＊	＊ ＊	＊	- ＊	＊	＊	＊			See MODEL CODE of the main body.
Additional function												/RA	1 point alarm (high close)	Multi-selection is not possible.
												/RB	1 point alarm (high open)	
												/RC	1 point alarm (low close)	
												/RD	1 point alarm (low open)	
												/NA	1 point alarm (high close)	
												/NB	1 point alarm (high open)	
												/NC	1 point alarm (low close)	
												/ND	1 point alarm (low open)	
												/E1	Electrical transmitter	
												/H1	Electrical transmitter with HART® communication	
												/JE	JPN Ex	Multi-selection is not possible.
												/EE	ATEX	
												/CE	NEPSI	
												/KE	KOSHA	
												/XE	IECEx	
												/M2	M20 × 1.5 (F)	Multi-selection is not possible.
												/NP	NPT1/2 (F)	
												/GH	G1/2 (F)	Multi-selection is not possible. *
												/SC	Stainless steel (SCS14) indicator	
Option												/OL	Degrease treatment	No restriction
												/WL	Non-water treatment	
												/AP	Pickling treatment	
												/AT	Airtightness inspection	No restriction
												/FG	Pressure-resistant, explosion-proof cable gland	IR series, etc.
												/AC	Provided	IR series, etc.

* Only able to be selected when a domestic explosion-proof certification and a pressure-resistant, explosion-proof cable gland are selected.
The pressure-resistant, explosion-proof cable gland is M20 x G1/2 (F).

STANDARD GRADUATION

There are 17 standard graduation patterns.

Scale range	Graduation divisions						
1.0 – 10	1	2	4	6	8	10	
1.2 – 12	1.2	2	4	6	8	10	12
1.5 – 15	1.5	2.5	5	7.5	10	12.5	15
1.6 – 16	1.6	5	10	15	16		
1.8 – 18	1.8	5	10	15	18		
2.0 – 20	2	5	10	15	20		
2.5 – 25	2.5	5	10	15	20	25	
3.0 – 30	3	5	10	15	20	25	30
3.5 – 35	3.5	10	20	30	35		
4.0 – 40	4	10	20	30	40		
4.5 – 45	4.5	10	20	30	40	45	
5.0 – 50	5	10	20	30	40	50	
6.0 – 60	6	10	20	30	40	50	60
7.0 – 70	7	20	40	60	70		
7.5 – 75	7.5	20	40	60	75		
8.0 – 80	8	20	40	60	80		
9.0 – 90	9	20	40	60	80	90	

CAUTIONS

- This flowmeter transmits the displacement caused by the magnet coupling. The surrounding magnetic field might affect its performance.
- Avoid installing in a magnet field and do not bring magnetic materials close (less than 20 cm) to the flowmeter. Note that insulation covers may affect the performance.
- When installing two or more flowmeters, install them at least 30 cm apart to avoid mutual interference.

■ Lining type

- There is a bend hole on the metal tube for degassing. Do not clog the hole with paint or heat insulator. Moisture at the bend hole may serve as solvent for corrosive gas and corrode the metal tube. Be sure to prevent rain water or condensation from entering the bend hole.
- We recommend the following gaskets for flange connection.
  - T#/9010 series (Nichias)
  - V#/N7030 series (Nippon Valqua Industries)

* Specification is subject to change without notice.

TOKYO KEISO CO., LTD.

Head Office : Shiba Toho Building, 1-7-24 Shibakoen, Minato-ku, Tokyo 105-8558
Tel : +81-3-3431-1625 (KEY) ; Fax : +81-3-3433-4922
e-mail : overseas.sales@tokyokeiso.co.jp ; URL : https://www.tokyokeiso.co.jp