TECHNICAL GUIDANCE

UP GRADED WITH WIDER LINEUP

FM MAG GAUGE

METAL TUBE LEVEL GAUGE

GENERAL

FM Mag Gauge is a float type metal tube level gauge. Liquid level is indicated by clear and visible color flappers. This eliminates problems likely in indication by existing glass gauges.

In addition, special material of PVC, Fluorocarbon resin etc. are ready to cover very corrosive liquid level measurement.

Alarm contacts and / or analog output unit can be additionally provided for remote monitoring and control purpose.

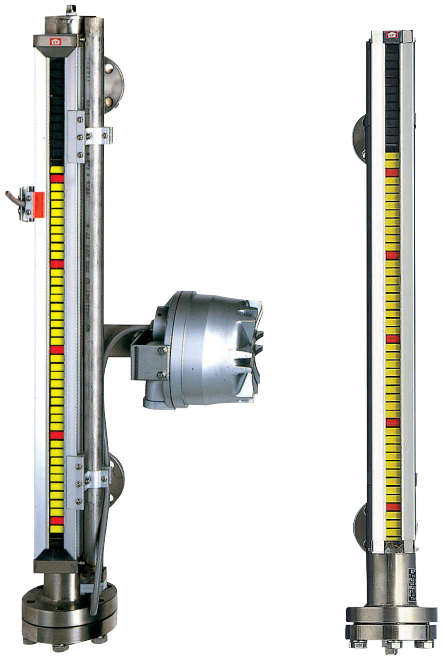

OPERATION PRINCIPLE

A float, in which a rounded shape magnet is integrated, is located in a non-magnetic tube (called Chamber). This float moves up and down depending on the liquid level in chamber with specified draft line. Outside of the chamber, an indicator unit is installed, in which plastic magnet rotating flappers are provided. The front surfaces of such flappers are black and the other sides of flappers are coloured in yellow for every 10mm and red for every 100mm. Then these flappers are rotated by movement of float to indicate liquid level in colour flappers.

FM Mag Gauge can be provided with alarm contacts and/or analog output (DC4~20mA) unit additionally onto this level indicator.

A reed switch in aluminum case at the setting point is actuated by the magnet in moving float. Water-tight construction, intrinsically safe system with the safety relay,and flameproof enclosure are available.
The 4 to 20 mA output type has the detection mechanism of float location (liquid level) along chamber.
The detector consists of a series of reed switches and precision type resistances which are actuated by the magnet inside float. The voltage signal of liquid level is converted to 4 to 20 mA signal for transmitting.
Water-tight construction and flameproof enclosure are available.

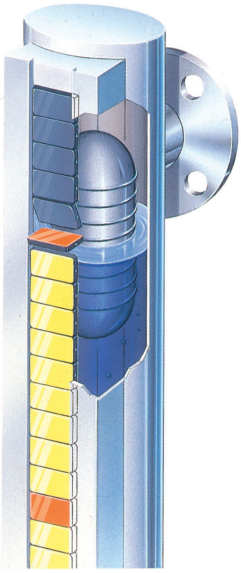

FEATURES

❏ Metal tube
Free from breakage and leakage.

❏ Clear and visible indication
By colour flappers, Liquid level in tanks is easily observed even from a distance. Free from blurs and smudges which are common for Glass Gauges.

❏ Covering high pressure and temperature
HPGSL*1 approved version is also available.
*1 High Pressure Gas Safety Law

❏ Various materials available
In addition to standard stainless steel, highly corrosion-resistant materials such as PVC and fluororesin are available.

❏ Full function
Indication, alarm contacts as well as analog output.
One unit of FM Mag Gauge covers all necessary functions of level monitoring and control.

STANDARD SPECIFICATION

Measuring object	: Max. viscosity 600mPa·s and without sticking and crystallization.
Available range	: Refer to pages of subject models.
Maximum OP. Press.	: Refer to pages of subject models.
Temp. range	: Refer to pages of subject models.
Level indication	: By colour flappers
Interval of flappers	: 10mm
Indication accuracy	: ±15mm
Process connection.	: Standard; Tank side through 1"(25mm) flanges Details are to be referred to pages of subject models.
Material	: To be referred to pages of subject models.

❊ The indication can follow up to 2cm/s in liquid level changing speed.

Consult factory for jacket type.

Consult factory for the direction of the connection nozzle other than “side – side”.

DESCRIPTION OF MODEL CODE

Model code of FM Mag Gauge is described as follows;

1) Only for local indicator

FM-[1][2][3]-[4]

2) Local indicator+Alarm contacts

FM-[1][2][3]-[4][5][6][7]

3) Local indicator+Analog output

FM-[1][2][3]-[4]/[8][9][10]

4) Local indicator+Alarm contacts+Analog output

FM-[1][2][3]-[4][5][6][7]/[8][9][10]

/[8][9][10] to be added to the end of code indication 2)

1	Indicator	Press., Temp. class (2 digit)
2		Chamber, Nozzle material
3		Float material and density range
4		Conn. flange rating
5	Alarm	Enclosure of alarm (Water-tight, intrinsic safety, flameproof)
6		No. of contact
7		No. of terminal box
8	Analog output	Enclosure of analog unit (Water-tight, intrinsic safety, flameproof)
9		Direction of sensor
10		Direction of convertor

Refer to pages of subject models for details of model code.

SUGGESTIONS

● On liquid level indication

The indicator flappers are actuated by magnet in float. There are different types of float for models, but the position of magnet and actual liquid level (Draft line to float) are different depending on the liquid density. Thus, the position where specific indicator flapper rotates and the position of actual liquid level are different slightly. This gap is fixed and shifted upward in fixed value. This gap (A) is indicated in Approval drawing. The zero line of indicator is to be located above actual liquid zero point by distance of A. Refer to instruction manual for details.

Also, be careful for minimum density for the float. Operation problem may occur in case of lower density than designed density.

Interface measurement and / or extreme low and high density liquid measurement are available on request. Consult factory for details.

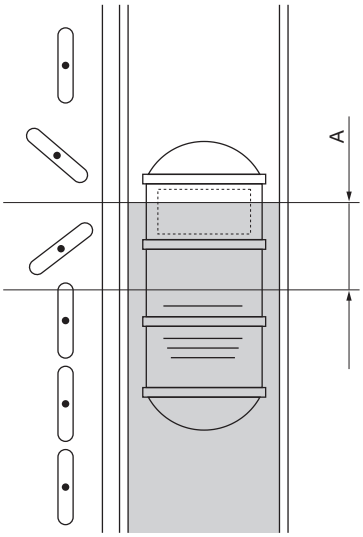

● Heating and heat insulation

In case of necessity of heating and thermal insulation for sticky liquids etc., thermal insulation is to be provided only for chamber portion as shown below. Do not cover indicator, alarm and analog unit by thermal insulation material. The heating or insulation on these parts might causes damages or malfuntioning of indication, alarm or transmitting mechanism.

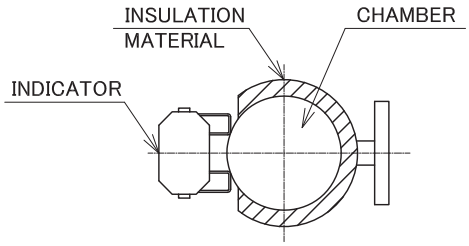

MODEL SELECTION GUIDANCE

Different types and materials are available for FM Mag Gauge. Refer to the following table for selection.

● For normal temperature

(Up to 120°C. Note that certain resins have a narrower temperature range.)

Model		Chamber material	Float material	Temperature range (°C)	Max. operating pressure MPa	Available length (mm) Min.	Available length (mm) Max.
FM-	121□	SUS304	✻3	−10 ≦ t ≦ 120	SUS: 3 TP340: 2.5	0 to 250	0 to 4380
	122□	SUS316	SUS316, SUS316L or titanium (TP340)				
	123□	SUS316L					
	12Z□	Special metal	Consultation required				
FM-	124□	PVC (HPVC)	PVC (HPVC)	0 ≦ t ≦ 60 (80)	0.2	0 to 250	0 to 2000
	125□	Stainless steel + PVC lining					0 to 4000
FM-	126□	Stainless steel + ETFE lining	NBR foam + PFA lining	0 ≦ t ≦ 100	0.2	0 to 250	✻2 0 to 3500
	127□	Stainless steel + PFA lining					
FM-	128□	Stainless steel + PTFE lining					
FM-	141□	SUS304	✻3	✻1 −10 ≦ t ≦ 120	13	0 to 250	0 to 4380
	142□	SUS316	titanium alloy				
	143□	SUS316L					
	14Z□	Special metal					

● For high temperature

Model		Chamber material	Float material	Temperature range (°C)	Max. operating pressure MPa	Available length (mm) Min.	Available length (mm) Max.
FM-	161□	SUS304	✻3	✻1✻4 −196 ≦ t ≦ +150 −10 ≦ t ≦ +400 The maximum operating temperature for TP340 is 250ºC.	SUS: 2 TP340: 1.6	0 to 250	0 to 4380
	162□	SUS316	SUS316, SUS316L or titanium (TP340)				
	163□	SUS316L					
	16Z□	Special metal	Consultation required				
FM-	181□	SUS304	✻3	✻1✻4 −196 ≦ t ≦ +150 −10 ≦ t ≦ +400	13	0 to 250	0 to 4380
	182□	SUS316	Titanium alloy				
	183□	SUS316L					
	189□	Special metal					

✻1 : For -196℃ ≦ t < -10℃, a sealed indicator is used for manufacturing.
✻2 : ETFE lining is available up to 2400 mm, and PTFE lining for full vacuum is available up to 2500 mm.
✻3 : Titanium (TP340) and titanium alloys are susceptible to hydrogen embrittlement in a hydrogen atmosphere.
✻4 : For 350℃ < t, the indicator will use window glass.

FM-1210,1220,1230,12Z0

Standard metallic type for low pressure and moderate temperature

FM-12$^{1}_{2}$^{3}0 series are standard type Mag gauge with SUS304, SUS316, or SUS316L material. (titanium float is used for some ranges.)

AVAILABLE RANGES OF PRODUCTS

Range : Min. 0~250mm
Max. 0~4380mm
Max. Press. : F.V. ~3MPa
(F.V. ~2.5MPa for a titanium float)
Temp. range : · FM-1200
−10℃≦t≦120℃
(select FM-1600 for t<-10℃ and 120℃<t)

DIMENSIONS

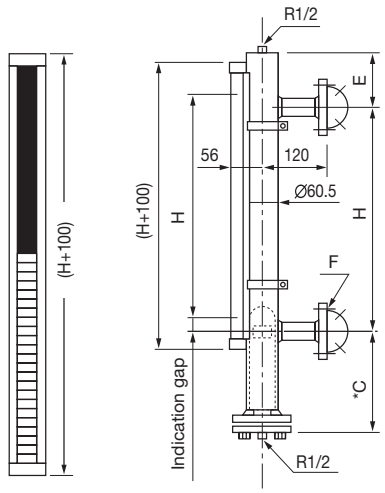

* Actual length "C" may be extended depending on the float type as is the case of gas filled type. Consult factory for details.

INDICATOR INSTALLATION ANGLE

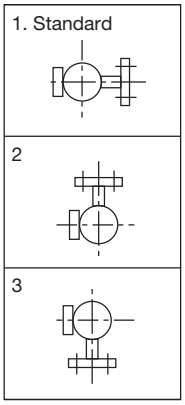

MODEL CODE

		—	12			—		Description	
Flapper pitch	FM							10mm(Accuracy ±15mm)	
Chamber material				1				SUS304	
				2				SUS316	
				3				SUS316L	
				Z				Other	
Density range (g/cm³) Float material					A			0.39~0.45	TP340 Titanium
					0			0.44~0.52	
					1			0.5~0.6	
					2			0.55~0.7	
					3			0.62~0.8	
					N			0.6~0.7	SUS316 or SUS316L
					P			0.65~0.8	
					5			0.7~0.9	
					6			0.8~1.0	
					7			0.9~1.4	
					8			1.0~1.5	
					9			1.25~2.0	
Connection flange rating							0	25A JIS 10KFF	
							1	25A JIS 10KRF	
							2	1" JPI 150#RF	
							3	1" ANSI 150#RF	
							4	25A JIS 20KRF	
							5	1" JPI 300#RF	
							6	1" ANS I300#RF	
							7	25A JIS 5KFF	
							8	Other 1" (25A) flanges	
							9	Special	

FLOAT AVAILABILITY AND SIZES

No.	Density (g/cm³)	Design C	Design E	Float Material	Float L
A	0.39~0.45	450	200	TP340 Titanium	470
0	0.44~0.52	350	200		380
1	0.5~0.6	280	200		300
2	0.55~0.7	250	200		270
3	0.62~0.8	210	200		220
N	0.6~0.7	485	160	SUS316 or SUS316L	520
P	0.65~0.8	385	150		410
5	0.7~0.9	305	130		320
6	0.8~1.0	235	110		250
7	0.9~1.4	195	110		200
8	1.0~1.5	165	100		170
9	1.25~2.0	165	100		170

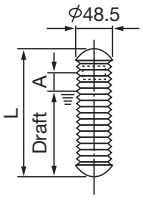

Max. operating press. is 1.33MPa for float No. A to 3.
Max. operating press. is 2.0MPa for float No. N to 9.
Consult factory for details when max. press. exceeds these values.

FM-121Z0,122Z0,123Z0,12ZZ0

Double tube type for liquefied gas

FM-12 1Z/2Z/3Z/ZZ 0 are metal tube level gauge for liquefied gas with SUS304, SUS316, or SUS316L material.
A double tube type has the effectiveness that inhibits the sudden rise and dive of a float by boiling and bumping of liquefied gas.

AVAILABLE RANGES OF PRODUCTS

Range : Min. 0~250mm
Max. 0~4380mm
Max. Press. : F.V. ~2.5MPa
Temp. range : -10℃≦t≦120℃
-60℃≦t<10℃ (sealed indicator)

DIMENSIONS

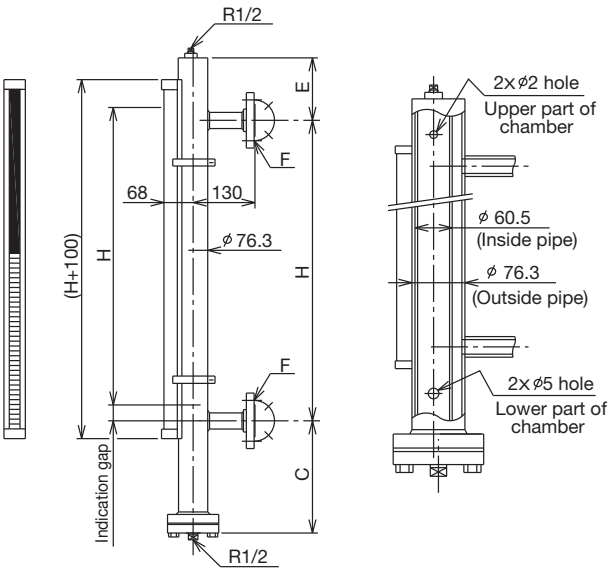

MODEL CODE

FM-12			—		Description	
Chamber material	1Z				SUS304	
	2Z				SUS316	
	3Z				SUS316L	
	ZZ				Other	
Densitiy range (g/cm³) Float material		A			0.39~0.45	TP340 Titanium
		0			0.44~0.52	
		1			0.5~0.6	
		2			0.55~0.7	
		3			0.62~0.8	
		Z			Special	
Connection flange rating				0	25A JIS 10KFF	
				1	25A JIS 10KRF	
				2	1" JPI 150#RF	
				3	1" ANSI 150#RF	
				4	25A JIS 20KRF	
				5	1" JPI 300#RF	
				6	1" ANSI 300#RF	
				7	25A JIS 5KFF	
				8	Other 1" (25A) flanges	
				9	Special	

INDICATOR INSTALLATION ANGLE

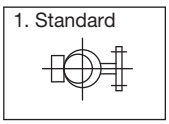

The direction to install indicator can not be changed at site.

FLOAT AVAILABILITY AND SIZES

No.	Densitiy (g/cm³)	Design C	Design E	Float Material	Float L
A	0.39 ~ 0.45	780	200	TP340 Titanium	790
0	0.44 ~ 0.52	580	200		610
1	0.5 ~ 0.6	450	200		470
2	0.55 ~ 0.7	380	200		400
3	0.62 ~ 0.8	320	200		330

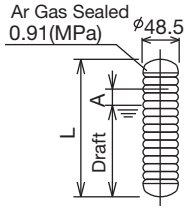

Max. operating press. is 1.96MPa.
Consult factory for details when max. press. exceeds this value.

FM-1240,1250

Made of PVC for low pressure and moderate temperature

FM-1240 series are level gauge with PVC material for both chamber and float to cover corrosive liquids.
FM-1250 has a PVC lined stainless steel chamber which offers better mechanical durability than pure PVC chambers.

AVAILABLE RANGES OF PRODUCTS

Range : Min. 0~250mm
Max. 0~2000mm *2
Max. Press. : 0.2MPa (cannot withstand full vacuum)
Temp. range : 0°C≦t≦60°C (HPVC : 0°C≦t≦80°C)

DIMENSIONS

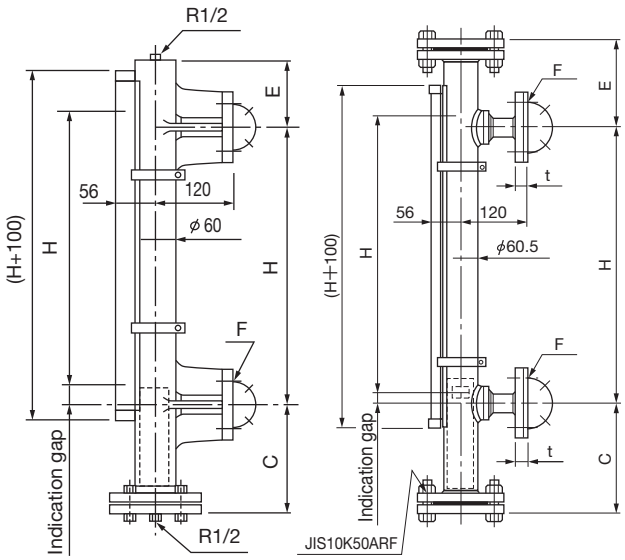

PVC FM-124□ HPVC FM-124H□

PVC lined SS FM-125□

INDICATOR INSTALLATION ANGLE

FM-124□
FM-124H□

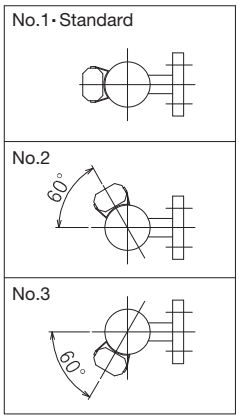

FM-125□

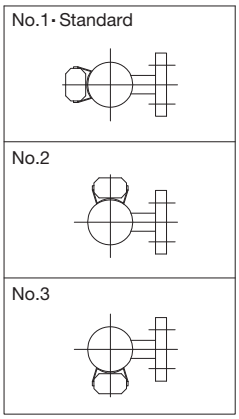

MODEL CODE

		—	12			—		Description
Flapper pitch	FM							10mm (Accuracy ±15mm)
Chamber material				4				PVC
				4H				HPVC
				5				St. Stl.+PVC lining
Density range (g/cm³) Float material *1					5			0.75~0.9 (0.7~0.8)
					6			0.8~1.0 (0.75~0.9)
					7			0.9~1.3 (0.85~1.2)
					8			1.05~1.7 (1.0~1.5)
					9			1.4~2.0 (1.35~2.0)
Connection flange rating *3							0	25A JIS 10KFF (t=21)
							2	1" JPI 150#FF (t=19.7)
							3	1" ANSI 150#FF (t=19.7)
							7	25A JIS 5KFF (t=17)
							8	Other 1" (25A) flanges
							9	Special

*1 Float material is PVC or HPVC. ( ) indicates applicable density range for FM-125 □ type (Stainless steel + PVC lining).
*2 In case of material code 5, max.4000mm is available.
*3 Connection flange of lined version is Flat Face (20A or more). The inside of parenthesis shows the thickness of flange.

FLOAT AVAILABILITY AND SIZES

For PVC version FM-124 □ and HPVC version FM-124H □

No.	Density (g/cm³)	Design C	Design E	Float L
5	0.75~0.9	290	120	300
6	0.8~1.0	250	120	250
7	0.9~1.3	200	120	200
8	1.05~1.7	150	120	150
9	1.4~2.0	140	120	150

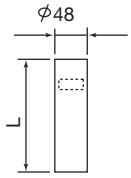

PVC,HPVC

For Stainless steel+PVC lining version FM-125 □

No.	Density (g/cm³)	Design C	Design E	Float L
5	0.7~0.8	290	150	300
6	0.75~0.9	250	150	250
7	0.85~1.2	200	160	200
8	1.0~1.5	150	170	150
9	1.35~2.0	140	180	150

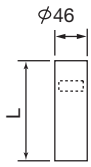

PVC

FM-1260, 1270

Made of Fluorocarbon resin for low pressure and moderate temperature

This series of gauges is made of fluorocarbon resin and other anti-corrosive materials.

AVAILABLE RANGES OF PRODUCTS

Range : Min. 0~250mm
Max. 0~3500mm
Maximum range of ETFE lining type is 2400mm

Max. Press. : F.V. ~0.2MPa

Temp. range : 0°C≦t≦100°C

Details of lining

ETFE lining : FM-126 □ Lining thickness 1.6 mm

PFA lining : FM-127 □ Lining thickness 1.75 mm

DIMENSIONS

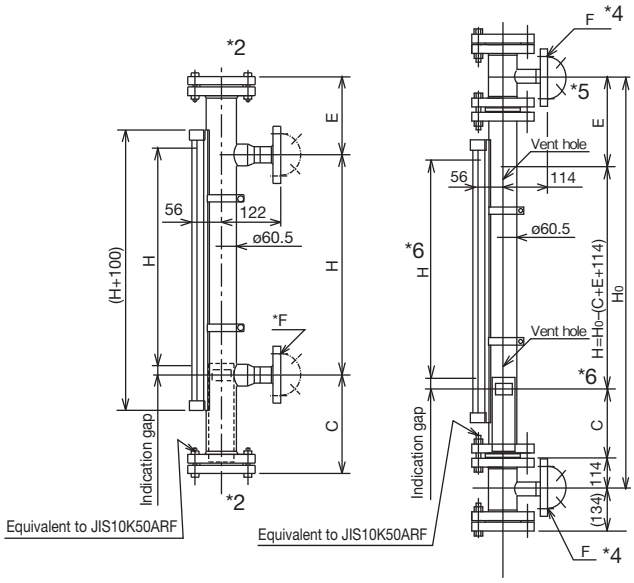

ETFE lining
FM-126 □

PFA lining
FM-127 □

* Vent holes are arranged on the metal tube. Do not fill them with paint or heat insulator.
Keep vent holes away from rain water and condensation.
If gas penetrating the lining dissolves into any water, it may corrode the metal tube.

INDICATOR INSTALLATION ANGLE

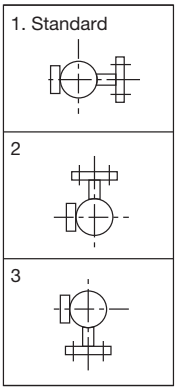

MODEL CODE

		—	12			—		Description	
Flapper pitch	FM							10mm(Accuracy ±15mm)	
Chamber material				6				ETFE lining	
				7				PFA lining	
Density range (g/cm³) Float material					A			0.72~0.75	NBR+ PFA lining(1.5t) *1
					B			0.75~0.8	
					C			0.8~0.9	
					E			0.9~1.0	
					F			1.0~1.3	
					G			1.3~1.5	
					H			1.5~2.0	
					9			—	Special
Connection flange rating *							1	25A JIS 10K	
							2	1" ANSI(JPI)#150	
							9	Special	

* The flange face of lining type is equivalent to the raised face of flange.

FLOAT AVAILABILITY AND SIZES

For ETFE lining version FM-126 □

No.	Density (g/cm³)	Design C	Design E	Float L
A	0.72~0.75	400	190	400
B	0.75~0.8	370	190	345
C	0.8~0.9	310	190	280
E	0.9~1.0	240	190	210
F	1.0~1.3	200	190	170
G	1.3~1.5	190	190	190
H	1.5~2.0	190	190	190

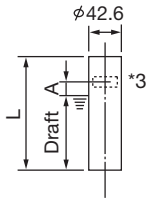

Titanium+PFA lining available on request
(Dimension will be changed. Consult factory for details.)

*1 The float for vacuum services is made of either stainless steel or titanium lined by ETFE.
*2 The blind flanges for vacuum services are made of carbon steel lined by PTFE.
*3 The float for vacuum services has a different shape and sizes.
*4 Connection F
*5 Shape and dimension E
*6 Measuring range H

For PFA lining version FM-127 □

No.	Density (g/cm³)	Design C	Design E	Float L
A	0.72~0.75	400	270	400
B	0.75~0.8	350	270	345
C	0.8~0.9	280	280	280
E	0.9~1.0	210	280	210
F	1.0~1.3	170	280	170
G	1.3~1.5	190	260	190
H	1.5~2.0	170	270	190

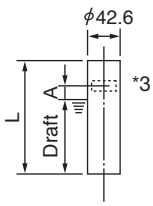

Titanium+PFA lining available on request
(Dimension will be changed. Consult factory for details.)

FM-1280

Made of Fluorocarbon resin for low pressure and moderate temperature

This series of gauges is made of fluorocarbon resin and other anti-corrosive materials.

AVAILABLE RANGES OF PRODUCTS

Range : Min. 0~250mm
Max. 0~3500mm *1
Max. Press. : F.V. ~0.2MPa
Temp. range : 0°C≦t≦100°C
Details of lining
PTFE lining : FM-128□ Lining thickness 2 mm
: 3mm for vacuum application
*1: Max. 2500mm for vacuum application

DIMENSIONS

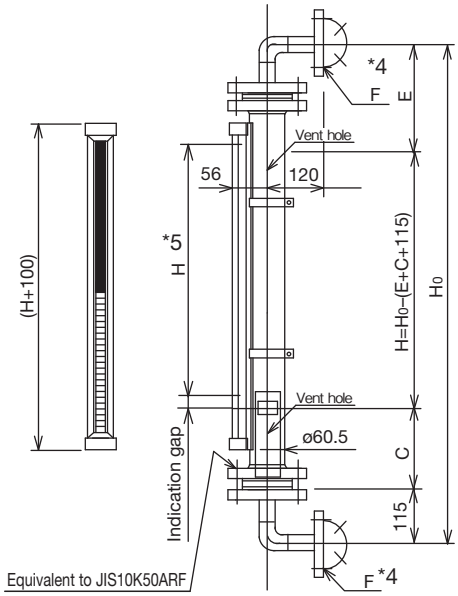

* Vent holes are arranged on the metal tube. Do not fill them with paint or heat insulator.
Keep vent holes away from rain water and condensation.
If gas penetrating the lining dissolves into any water, it may corrode the metal tube.

INDICATOR INSTALLATION ANGLE

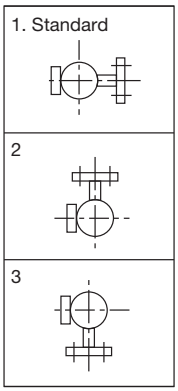

MODEL CODE

		—	12			—		Description	
Flapper pitch	FM							10mm(Accuracy ± 15mm)	
Chamber material				8				PTFE lining	
Density range (g/cm³) Float material					A			0.72~0.75	NBR+ *3 PFA lining(1.5t)
					B			0.75~0.8	
					C			0.8~0.9	
					E			0.9~1.0	
					F			1.0~1.3	
					G			1.3~1.5	
					H			1.5~2.0	
					9			—	Special
Connection flange rating *2							1	25A JIS 10K	
							2	1" ANSI(JPI)#150	
							9	Special	

*2 The flange face of lining type is equivalent to the raised face of flange.
*3 The float for vacuum services is made of either stainless steel or titanium lined by ETFE.
*4 Connection F
*5 Measuring range H

FLOAT AVAILABILITY AND SIZES

No.	Density (g/cm³)	Design C	Design E	Float L
A	0.72~0.75	400	260	400
B	0.75~0.8	350	260	345
C	0.8~0.9	280	270	280
E	0.9~1.0	210	270	210
F	1.0~1.3	170	270	170
G	1.3~1.5	190	260	190
H	1.5~2.0	190	270	190

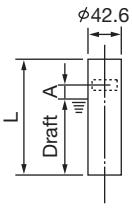

* Titanium+PFA lining available on request
(Dimension will be changed. Consult factory for details.)
* Vacuum application of PTFE, dimension will be changed.

FM-1410, 1420, 1430, 14Z0

Metallic type for high pressure and moderate temperature

AVAILABLE RANGES OF PRODUCTS

Range : Min. 0~250mm
Max. 0~4380mm
Max. Press. : See the table below.
Temp. range : –10°C ≦ T ≦ 120°C (Select FM-1800 for a temperature of t<–10°C and 120°C<t)

DIMENSIONS

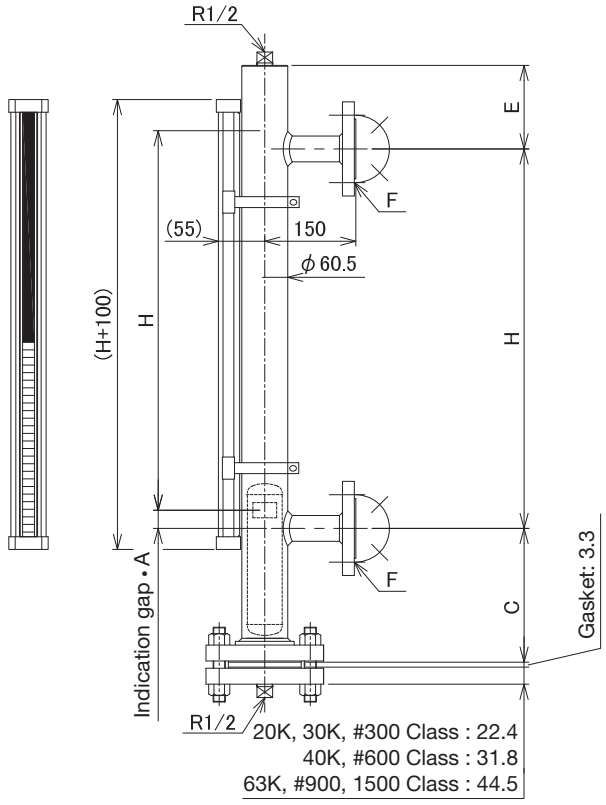

INDICATOR INSTALLATION ANGLE

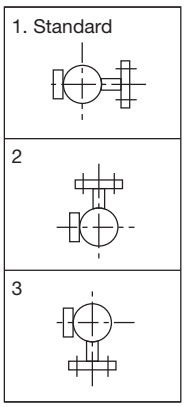

Allowable measurement temperature and pressure
Float No. A to E, 1 to 6 Can withstand full vacuum.

T (°C)	–10	0	25	50	75	100	120
P (MPa)	13.2	13.2	13.2	12.8	11.9	11.1	10.7

MODEL CODE

FM-14			–		Description	
Chamber material	1				SUS304	
	2				SUS316	
	3				SUS316L	
	Z				Special	
Density range (g/cm³) Float materia		A			0.52 ≦ ρ < 0.54	Ti-6Al-4V (titanium alloy) ★For low-viscosity (water-equivalent) liquids
		B			0.54 ≦ ρ < 0.57	
		C			0.57 ≦ ρ < 0.61	
		D			0.61 ≦ ρ < 0.69	
		E			0.69 ≦ ρ < 0.85	
		F			0.85 ≦ ρ < 1.20	
		1			0.59 ≦ ρ < 0.61	Ti-6Al-4V (titanium alloy) ■ For high-viscosity (oil-equivalent) liquids
		2			0.61 ≦ ρ < 0.65	
		3			0.65 ≦ ρ < 0.70	
		4			0.70 ≦ ρ < 0.80	
		5			0.80 ≦ ρ < 1.00	
		6			1.00 ≦ ρ < 1.40	
		Z			Special	Ti-6Al-4V
Connection ange rating			1		25A JIS 40KRF	
			2		1" JPI 600#RF	
			3		1" ANSI 600#RF	
			4		25A JIS 63KRF	
			5		1" JPI 900#RF	
			6		1" ANSI 900#RF	
			9		Special	

Titanium alloys are susceptible to hydrogen embrittlement in a hydrogen atmosphere.

FLOAT AVAILABILITY AND SIZES

No.	Density ρ (g/cm³)	Design C	Design E	Float L
A	0.52 ≦ ρ < 0.54	715	200	756
B	0.54 ≦ ρ < 0.57	615	200	655
C	0.57 ≦ ρ < 0.61	515	200	554
D	0.61 ≦ ρ < 0.69	420	200	453
E	0.69 ≦ ρ < 0.85	315	200	352
F	0.85 ≦ ρ < 1.20	215	200	250
1	0.59 ≦ ρ < 0.61	710	200	760
2	0.61 ≦ ρ < 0.65	615	200	659
3	0.65 ≦ ρ < 0.70	515	200	558
4	0.70 ≦ ρ < 0.80	420	200	457
5	0.80 ≦ ρ < 1.00	320	200	356
6	1.00 ≦ ρ < 1.40	215	200	254
Z	Special	–	–	–

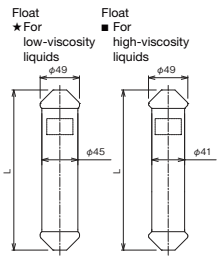

FM-1610, 1620, 1630, 16Z0

Metallic type for low pressure and high temperature

FM-1600 is a series of metal tube level gauge for high temperature with stainless steel chamber and float (titanium float for low density applications).

AVAILABLE RANGES OF PRODUCTS

Range : Min. 0~250mm
Max. 0~4380mm

Temp. Range and Max. Press.
SUS316 & 316L Float: -196≦t≦+400°C, FV≦P<1.35MPa
TP340 Float: -196≦t≦+250°C, FV≦P<0.68MPa
SUS316 & 316L Float (Gas Sealed): -196≦t≦+225°C, FV≦P≦2MPa
TP340 Float (Gas Sealed): -196≦t≦+175°C, FV≦P≦1.6MPa
Indicator Specifications
-10≦t≦+350°C: Standard type
-196≦t≦+150°C: Sealed type
350°C<t: Indicator glass
Caution
Alarm and 4-20mA output have individual temperature limits.

DIMENSIONS

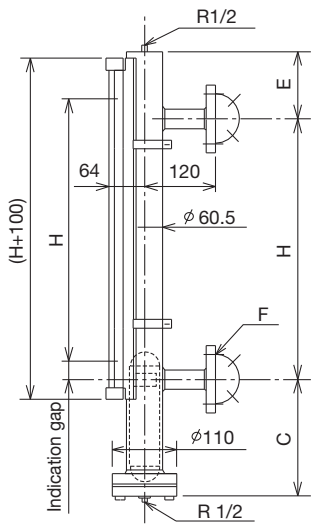

* Dimension will be changed.
Consult factory for details.

INDICATOR INSTALLATION ANGLE

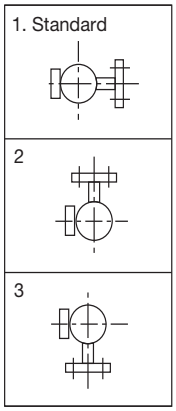

Heating / thermal insulation are to be conducted onto chamber portion only.

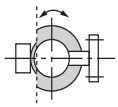

MODEL CODE

FM-16			—		Description	
Chamber material	1				SUS304	
	2				SUS316	
	3				SUS316L	
	Z				Other	
Density range (g/cm³) Float material		A			0.39~0.45	TP340 Titanium
		0			0.44~0.52	
		1			0.5~0.6	
		2			0.55~0.7	
		3			0.62~0.8	
		P			0.65~0.8	SUS316 or SUS316L
		5			0.7~0.9	
		6			0.8~1.0	
		7			0.9~1.4	
		8			1.0~1.5	
Connection flange rating			—	0	25A JIS 10KFF	
			—	1	25A JIS 10KRF	
			—	2	1" JPI 150# RF	
			—	3	1" ANSI 150# RF	
			—	4	25A JIS 20KRF	
			—	5	1" JPI 300# RF	
			—	6	1" ANSI 300# RF	
			—	7	25A JIS 5KFF	
			—	8	Other 1"(25mm) flanges	
			—	9	Special	

FLOAT AVAILABILITY AND SIZES

No.	Density (g/cm³)	Design C	Design E	Float Material	Float L
A	0.39～0.45	620	200	TP340 Titanium *0.68MPa	650
0	0.44～0.52	490	200		520
1	0.5～0.6	390	200		410
2	0.55～0.7	340	200		360
3	0.62～0.8	290	200		300
P	0.65～0.8	460	170	SUS316 or SUS316L *(1.35MPa)	460
5	0.7～0.9	400	170		400
6	0.8～1.0	300	150		300
7	0.9～1.4	260	150		260
8	1.0～1.5	230	130		230

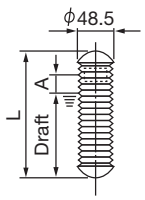

* Consult factory for details when max. press. exceeds these value.

FM-1810, 1820, 1830, 18Z0

Metallic type for high pressure and high temperature

AVAILABLE RANGES OF PRODUCTS

Range : Min. 0~250mm
Max. 0~4380mm

Max. Press. : See the table below.

Temp. range : –96°C ≦ t ≦ +150°C (sealed indicator)
–0°C ≦ t ≦ +400°C
(For 350°C >t, the indicator will use window glass.)
(Please note that alarm switches and analog output, 4 to 20 mA, transmitters have their own temperature limits.)

DIMENSIONS

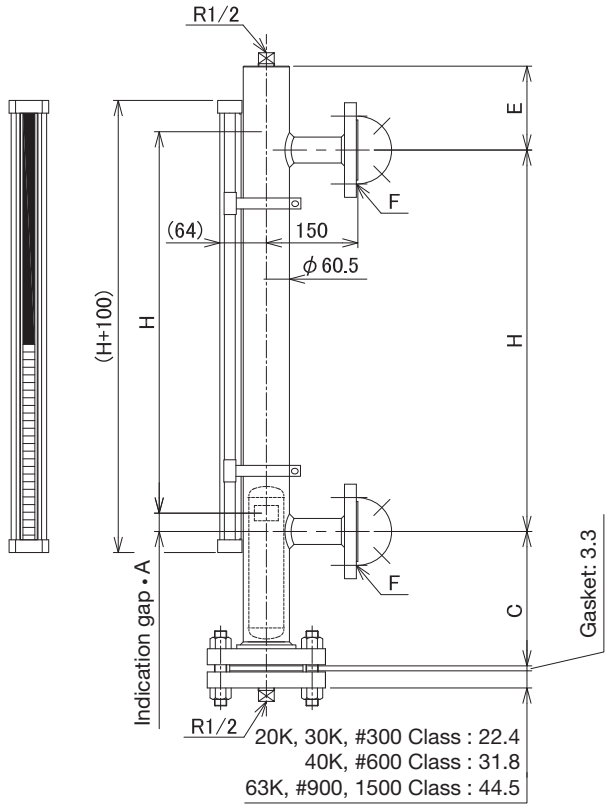

MODEL CODE

FM-18			–		Description
Chamber material	1				SUS304
	2				SUS316
	3				SUS316L
	Z				Special
Density range (g/cm³) Float materia		A			0.57 ≦ ρ < 0.60 — Ti-6Al-4V (titanium alloy) ★For low-viscosity (water-equivalent) liquids
		B			0.60 ≦ ρ < 0.64
		C			0.64 ≦ ρ < 0.70
		D			0.70 ≦ ρ < 0.81
		E			0.81 ≦ ρ < 1.04
		F			1.04 ≦ ρ < 1.50
		1			0.64 ≦ ρ < 0.68 — Ti-6Al-4V (titanium alloy) ■ For high-viscosity (oil-equivalent) liquids
		2			0.68 ≦ ρ < 0.73
		3			0.73 ≦ ρ < 0.81
		4			0.81 ≦ ρ < 0.94
		5			0.94 ≦ ρ < 1.22
		6			1.22 ≦ ρ < 1.60
		Z			Special — Ti-6Al-4V
Connection ange rating			1		1" JPI 900#RF
			2		1" ANSI 900#RF
			3		1" JPI 900#RTJ
			4		1" ANSI 900#RTJ
			5		1" JPI 1500#RF
			6		1" ANSI 1500#RF
			7		1" JPI 1500#RTJ
			8		1" ANSI 1500#RTJ
			9		Special

Titanium alloys are susceptible to hydrogen embrittlement in a hydrogen atmosphere.

FLOAT AVAILABILITY AND SIZES

No.	Density ρ (g/cm³)	Design C	Design E	Float L
A	0.57 ≦ ρ < 0.60	705	200	756
B	0.60 ≦ ρ < 0.64	605	200	655
C	0.64 ≦ ρ < 0.70	510	200	554
D	0.70 ≦ ρ < 0.81	410	200	453
E	0.81 ≦ ρ < 1.04	310	200	352
F	1.04 ≦ ρ < 1.50	210	200	250
1	0.64 ≦ ρ < 0.68	710	200	760
2	0.68 ≦ ρ < 0.73	610	200	659
3	0.73 ≦ ρ < 0.81	510	200	558
4	0.81 ≦ ρ < 0.94	410	200	457
5	0.94 ≦ ρ < 1.22	310	200	356
6	1.22 ≦ ρ < 1.60	210	200	254
Z	Special	–	–	–

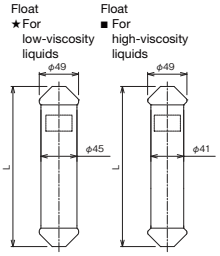

INDICATOR INSTALLATION ANGLE

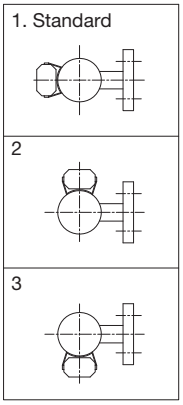

Heating / terminal insulation are to be conducted onto chamber portion only.

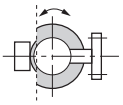

Allowable measurement temperature and pressure
Float No. A to E, 1 to 6 — Can withstand full vacuum.

T (°C)	–196	–175	–150	–125	–100	–75	–50	–25	0	25	50	75
P (MPa)	13.2	13.2	13.2	13.2	13.2	13.2	13.2	13.2	13.2	13.2	12.8	11.9

T (°C)	100	125	150	175	200	225	250	275	300	325	350	375	400
P (MPa)	11.1	10.7	10.1	9.7	9.4	9.1	8.8	8.6	8.4	8.2	8.1	8.0	7.9

Support

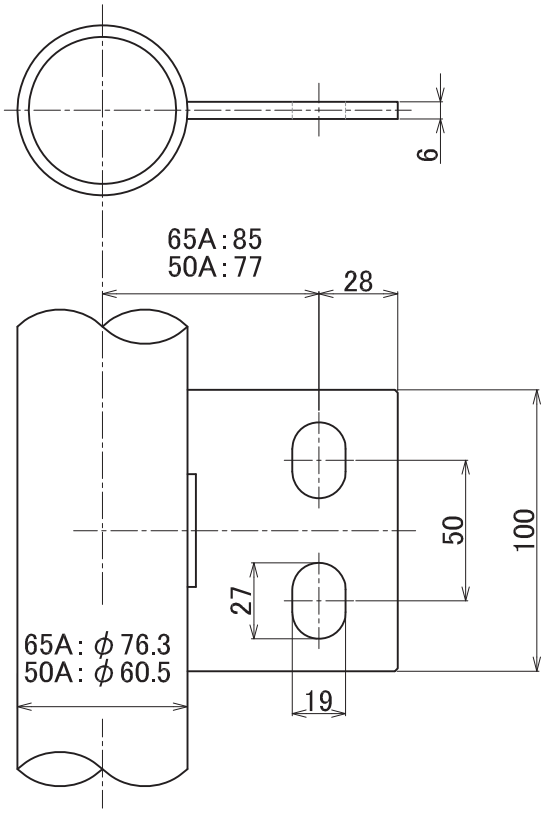

- A support is provided when the face-to-face dimension is 2500 mm or more.
- The support material is 304SS.
- Mounting holes on a support are designed for M16 bolts.

If M16 bolts are not applicable, M12 bolts can be used instead with plain washers of 12 nominal diameter.

Height scale plate (the scale plate is optional)

Example: For 1000 mm measurement range (left-side mounting)

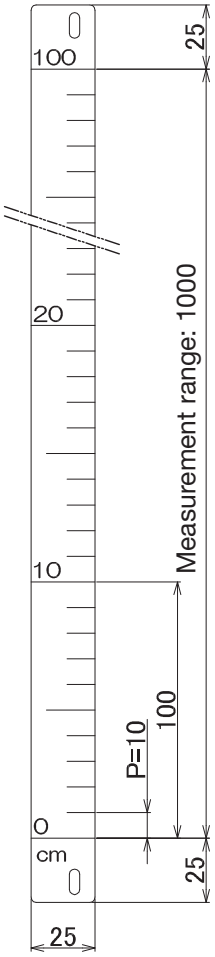

Material: SUS304
Plate thickness: t = 1.5
Background color: White
Font color: Black
Character size: 6
Scale: Black

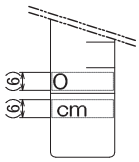

Example of character size

- Standard: Left-side mounting
- When the gauge has a scale plate, the indicator is yellow at 10 mm intervals only.
- When using a capacity scale plate, a tank table is required to indicate both capacity and liquid level.

Indicator

Indicator window glass: A single indicator can cover a measurement range of up to 800 mm.
For ranges exceeding this, the indicator is split, resulting in an unmeasurable zone of approximately 30 mm, as shown in the illustration below.

Sealed type : A single indicator can cover a measurement range of up to 2900 mm.
For ranges exceeding this, the indicator is split, resulting in an unmeasurable zone of approximately 60 mm, as shown in the illustration below.

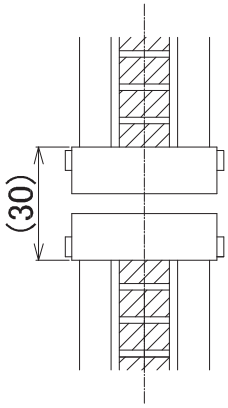

Indicator window glass

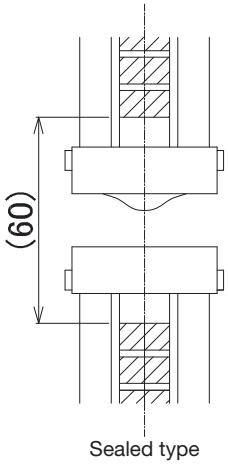

Sealed type

ADD-ON ALARM CONTACTS

Alarm contact (s) can be provided to all FM Mag Gauges.
A reed switch is located at side portion of chamber which is actuated by the magnet in float. Watertight, Intrinsically safe as well as Flameproof versions are available.

MODEL CODE OF ALARM CONTACTS

FM-□□□-□5 6 7/ □□□□

FM-1	5	6	7		
Enclosure	W				Watertight (Non-explosion proof)
	E				EX-d, Flameproof
	S				EX-i, Intrinsically safe
Contact					No. of contact
Terminal box					No. of terminal box

SPECIFICATION

● Watertight version (FM-□□□-□W□□)

Type of contact : 1 X SPST(Self-holding contact)
Contact capacity : 10W, AC/DC
Max. voltage ; AC,DC 100V
Fluid temp. : –10~200°C
Ambient temp. : –10~60°C
Enclosure : Watertight

No. of contact : Depending on the length of chamber (No limitation)
Repeatability : ±15mm (Equivalent to indicator accuracy)
Reset span : Max. 30mm (Fixed)
Alarm action : High or Low (To be specified. Also at field adjustable)
Setting range : 50mm (70 mm between H-L)
Min. gap between points : 50mm (Shorter gap on request)
Accessory : Surge suppressor intergrated (It is not attached to IS version)
Terminal box : The cable from a reed switch is drawn and it is used for terminal connection.
Installed terminal : 8P, M3.5 screws
Cable entries : For alarm switches 4 entries with packing type cable gland, Max. cable dia. 7 mm
For alarm outlet 1 X G3/4 (Female)
Construction : Splash-proof construction
Protection rating : IP66&IP67

Note 1: When installing the insulating material, do not install it around the alarm sensor.

● Intrinsically safe version (FM - □□□ -□S □□)
A safety relay is inserted into the contact loop of watertight version to achieve Insrinsically safe loop.

IS classification : Ex ia IIC T6
(Subject to using of specified safety relay)

Dimension of Safety Relay EB3C-R01A (1 point use)

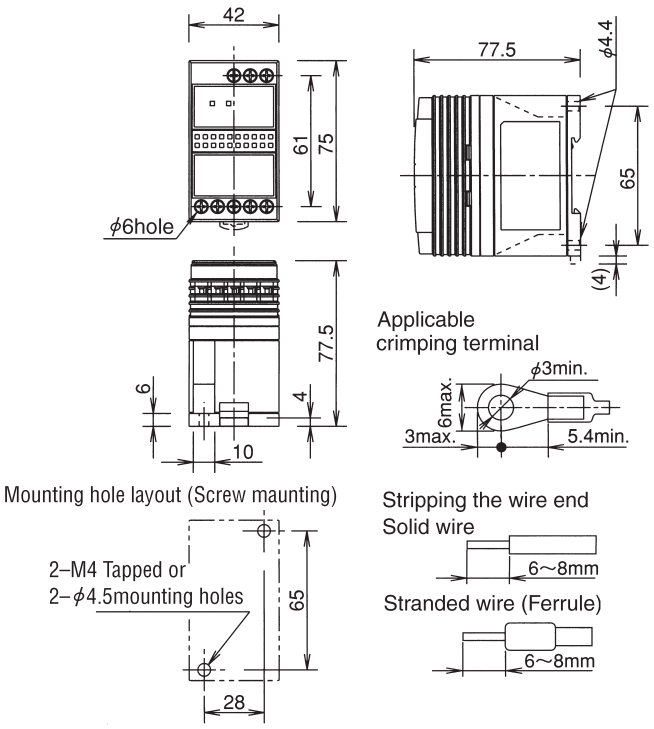

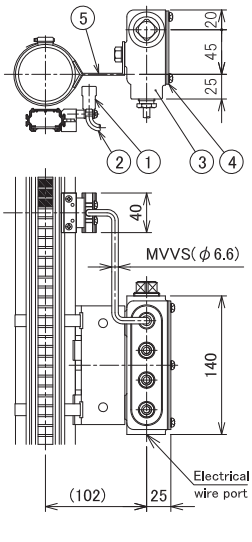

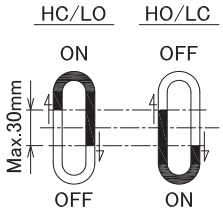

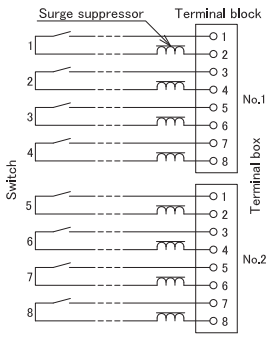

[Materials and exterior]

No.	Part	Material	Exterior
①	Switch body	A6063P	Anodized aluminum
②	Cable	PVC	---
③	Terminal box (case)	AC2A	Painted silver (polyurethane resin)
④	Terminal box (cover)	SUS304	Unpainted
⑤	Bracket	SUS304	Unpainted

● Flameproof enclosure version (FM-1□□□- □E□□)

Individual reed switch and terminals are capcellated in one pressure tight housing for each alarm contact.

Construction : Flameproof enclosure (d2G5) (No. T49972)
Type of contact : SPST (Self-holding contact)
Contact capacity : 10W, AC/DC
Max. voltage ; AC,DC 100V
No. of contact : Depending on the length of chamber
(No limitation)
Repeatability : ±15mm
(Equivalent to indicator accuracy)
Reset span : Max. 30mm (Fixed)
Alarm action : High or Low (To be specified.)
Setting range : From 100 mm above lower end to 100 mm below upper end
Min. gap between points :
250mm (Shorter gap on request)
Fluid temp. : -10~200˚C
Amb. temp. : -10~60˚C
Accessory : Surge suppressor integrated
Built-in terminal : 2P (M3)
Installation : Clamping onto chamber
Cable entry : 1XG1/2 (Female)
Note: A cable gland is optional. A cable gland must be used for the gauge to be approved as a flameproof enclosure. If provided by the customer, use the SXBM-16B of Shimada Electric Co., Ltd.
Protection rating : IP66

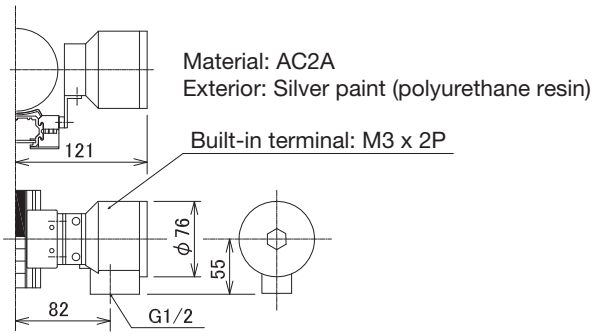

ADD-ON CURRENT LEVEL TRANSMITTER

The 4 to 20mA 2-wire current transmitter can be additionally provided for all types of FM-1000 Mag Gauge even together with alarm contact (s).

Watertight, Intrinsically safe and Flameproof versions are available to meet area classification.

MODEL CODE OF ANALOG TRANSMITTER

FM-1	8	9	10	
Enclosure	W			Watertight
	E			Flameproof
	S			Intrinsically safe
Direction of sensor		R		Right hand side
		L		Left hand side
Direction of Converter			R	Right hand side
			L	Left hand side

SPECIFICATION

Output span : Min. 0~250mm
Max. 0~4380mm
(Shorter output span than measuring range on request)

Enclosure : 1) Watertight
FM-1□□□- □□□□/ □W□□
2) Flameproof
FM-1□□□- □□□□/ □E□□
Ex d IIB T6, RIIS certification No. TC14720
3) Intrinsically safe
FM-1□□□- □□□□/ □S□□
Ex ia IIC T4, RIIS certification No. TC16354

Protection rating : Flameproof: IP66
Watertight, Intrinsic safety: IP66 & IP67

Fluid temp. : –20~200˚C

Amb. temp. : –20~55˚C

Power supply : Nominal DC24V

Max. load resistance
Watertight (W) 600Ω
Flameproof (E) 600Ω

Intrinsically safe construction (600 – Resistance inside barrier)Ω
For MTL7728+: 600 - 333 = 267Ω
For MTL7787+: 600 - 359 = 241Ω

(Cautions)
When using an MTL7728+ barrier for this intrinsically safe transmitter, the load must be connected to the positive (+) terminal, because the negative (–) terminal is grounded.
When the load cannot be connected to the positive terminal, use of an MTL7787+ barrier is recommended.

Output accuracy : $\pm(0.2+\frac{10}{H}\times100)$% F.S.
H : Measuring range(mm)

Resolution : 5 mm
If the detector does not detect magnetic force, the unit outputs 26 mA or more.

DIMENSION

Watertight (W) and Intrinsically safe (S)

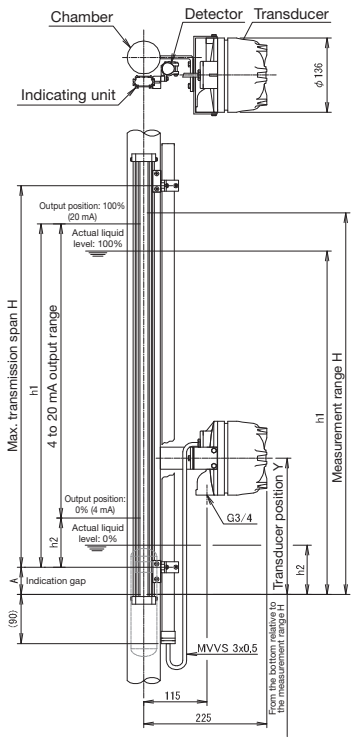

Note 1: The transmitter (4 to 20mA) shall be replaced or readjusted after returning to Tokyo Keiso.
Note 2: When installing the insulating material, do not install it around the detector.

Flameproof version (E)

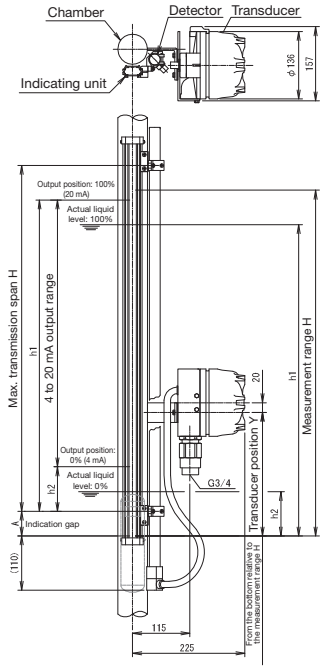

*: For the TIIS flameproof type, mount the flameproof cable gland included in the package, or one of those specified by TOKYO KEISO, directly to the wiring port of the gauge. Use a cable recommended for explosionproof wiring, such as a control cable (JIS C3401) or one with similar specifications. Perform waterproof treatment by applying non-hardenable sealant, such as a liquid gasket, to the connection of the cable gland and the gauge.

Typical specification sheet

Use following sheet for your inquiry or ordering

Model code	FM-1□□□-□□□□ / □□□			Quantity	
Fluid		Density		Viscosity	
Pressure	MPa		Temperature	°C	
Measuring span (measuring range)	mm		Connection flange size and rating		
Other requirements					

* Specification is subject to change without notice.

TOKYO KEISO CO., LTD.

Head Office : Shiba Toho Building, 1-7-24 Shibakoen, Minato-ku, Tokyo 105-8558
Tel : +81-3-3431-1625 (KEY) ; Fax : +81-3-3433-4922
e-mail : overseas.sales@tokyokeiso.co.jp ; URL : https://www.tokyokeiso.co.jp