TECHNICAL GUIDANCE

Compact indicator for small flow measurement with HART® communication, ideal for devices, test plants and general industrial processes

AM3000 Series
MICRO FLOWMETER

OUTLINE

The AM3000 series micro flowmeter is a metal tube flowmeter for small flow measurement. The all-metal construction ensures precise measurement even in high-temperature and high-pressure services.

Thanks to its compact design, the AM3000 is suitable for assembling onto various devices. It can also be used for small-bore industrial processes.

As outputs, current output and current output with HART® communication are available.

Local indication, pneumatic output, and alarm output functions are available in the M-900 series.

FEATURES

❏ Compact design
Small and light design facilitates installation onto panels as well as process pipings.

❏ Suitable for corrosive and opaque fluids
Non-corrosive materials such as titanium and UNS10276 are available to meet your specifications.

❏ HART® communication protocol

❏ Explosion-proof construction
Certified with several explosion-proof standards (TIIS, KOSHA, NEPSI, ATEX, IEC-Ex)

❏ Protection rating: IP67

OPERATING PRINCIPLE

The flow path has a tapered part. A float containing a magnet is located in the tapered tube. Fluid flows from the bottom of the flowmeter and goes upward through the tube. The differential pressure produced by the float and the tapered tube pushes the float upward, and the float stops when the weight of the float and the differential pressure balance. In other words, the position of the float corresponds to the flow rate. The movement of the magnet in the float is detected by the magnetic coupling, which converts it into the movement of the pointer.

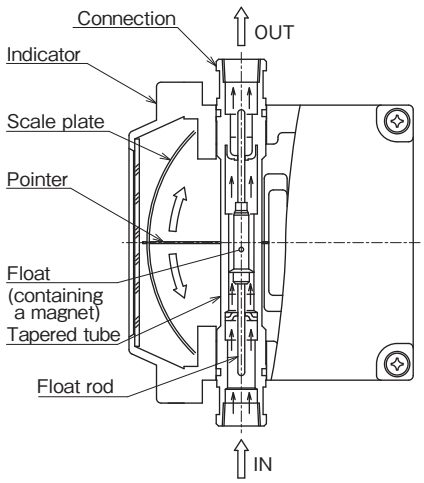

MODEL CODE

Basic model	Material/Connection code	Function 1 code	Function 2 code	The quotation may indicate the Basic model and Function 1 code.
AM3 □□□	—□□□□□—□	/□□	/□□	Specifications
Flow direction	1			Bottom → Top
	2			Bottom → Top side
	3			Bottom side → Top side
	4			Bottom side → Top
	5			Bottom rear → Top rear
	Z			Others
Function of indicator	E			Analog current output
	H			Analog current output with HART® communication
Explosion-proof	W			Dust-tight, immersion-proof/non-explosionproof
	E			Flameproof
	S			Intrinsically safe
Connection material	—01			SUS304
	—02			SUS316
	—03			SUS316L
	—ZZ			Others
Connection rating	MS			Metric screw threads (F/M thread)
	RS			Taper threads (F/Rc thread)
	NS			Taper threads (F/NPT thread)
	J1			JIS 10 K
	J4			JIS 20 K
	A2			ANSI Class 150
	A5			ANSI Class 300
	P2			JPI Class 150
	P5			JPI Class 300
	ZZ			Others
Connection	T			Screw
	R			RF flange
	F			FF flange
	Z			Others
Connection size	—M			8 mm or 1/4″
	—0			10 mm or 3/8″
	—1			15 mm or 1/2″
	—2			20 mm or 3/4″
	—3			25 mm or 1″
	—Z			Others
Additional function 1 — Functional construction		/DL		Liquid damper
		/DU		Gas damper
		/VL		Needle valve at inlet
		/VU		Needle valve at outlet
		/PN		Panel mounting type
Additional function 2 — Output			/E1	Analog current output
			/H1	Analog current output with HART® communication
Flameproof enclosure			/CE	NEPSI
			/EE	ATEX
			/JE	TIIS
			/KE	KOSHA
			/XE	IEC-Ex
Intrinsically safe enclosure			/CI	NEPSI
			/EI	ATEX
			/JI	TIIS
			/KI	KOSHA
			/XI	IEC-Ex
Cable entry			/M2	M20 × 1.5 (F)
			/G1	G1/2 (F)
			/N1	NPT1/2 (F)
Option — Cleaning			/OL	Oil-free treatment
			/WL	Water-free treatment
Test			/LT	Airtight test
Accessory			/PC	Metallic waterproof connector
			/FG	Flameproof cable gland (necessary for TIIS flameproof)
			/MG	Magnet strainer
			/AC	Others
Special spec. — Double scale			/WS	Double scale, output for the main scale (Current output and current output with HART® communication only)
			/WE	Double scale, output for the main and sub scales (Current output and current output with HART® communication only)

Specifications

The AM3000 series is available in the following types based on indicators, fluids, flow range, and fluid temperature.
For details, see individual specifications. For other specifications, consult Tokyo Keiso.

Type		Standard type			Large-flow type	
Flow range	Liquid *1 [L/h]	2 to 5	5 to 10	10 to 300	300 to 600	
	Gas *1 [L/h (nor)]	60 to 150	150 to 300	300 to 8,500	8,500 to 17,000	
Fluid pressure [MPa]		Max. 10 (Option: 20) (Subject to flange ratings for the flange connection) (Max. 2.94 for the types with a liquid damper)				
Fluid temperature [°C]		0 to 149 (External tube type: –20 to 200 *3)				
Indication accuracy *4 [%F.S.]		±5 (High-accuracy type: ±3)		±3 (High-accuracy type: ±2)		
Rangeability		10:2	10:1			
Connection	Screw	1/4, 3/8 (Standard), 1/2			3/8, 1/2 (Standard), 3/4	
	Flange	10A, 15A, 20A, 25A			15A, 20A, 25A	
Indicator	Internal tube type	○	○	○	○	○
	External tube type	○	○	○	○	○
	Flameproof type	○	○	○	○	○
Flow direction		• Bottom → Top (Types with a liquid damper not available) • Bottom → Top side (Types with a liquid damper not available) • Bottom side → Top side • Bottom side → Top • Bottom rear → Top rear				

*1 Liquid: water (density of 1.0 g/cm^3, viscosity of 1.0 mPa·s), Gas: air (0°C, 0 MPa)

*2 Models with a damper are not available.

*3 Models with a damper are not available. The fluid temperature must be –15 to 150°C for the types with a needle valve.

*4 Flowmeters for liquids with the specified indication accuracies may not be available depending on the liquid viscosity.

STANDARD SPECIFICATION

● Measuring fluid

Liquids and gases

The models with a damper are recommended for low-pressure gases (less than 0.3 MPa)

● Viscosity limit in liquid measurement

Flow range	Viscosity limit (mPa·s)
2 to 20 L/h	5
20 to 50 L/h	10
50 L/h or higher	20

● Materials

Part name	Standard	Alternative
Body	SUS304/SUS316L	SUS304, SUS316 (SCS14), UNS10276 *1, Titanium *1
Tapered tube	SUS316L	SUS304, SUS316, UNS10276 *1, Titanium *1
Float	SUS316L/PTFE	SUS304, SUS316, UNS10276 *1, Titanium *1 ／ PTFE

*1 Not applicable to flowmeters with a gas damper.

● Painting color

Painting	Color	
Indicator body	Jade green	Munsell 7.5BG4/1.5
Indicator cover, transmitter	Light gray	Munsell N7.5

AM3000/E1 SERIES (LOCAL INDICATOR WITH CURRENT OUTPUT)

AM3000/H1 SERIES (LOCAL INDICATOR WITH CURRENT OUTPUT AND HART® COMMUNICATION)

AM3000/E1 series indicates flow rates with a pointer and scale plate, and outputs electric signals (4–20 mA DC) proportional to the flow rate.
AM3000/H1 series indicates flow rates with a pointer and scale plate, and outputs electric signals (4–20 mA DC) superimposed by digital signals complying with the HART protocol (multidrop mode).
In addition to the dust-tight and immersion-proof types, intrinsically-safe and flameproof versions will be available in the near future (currently under consideration).

● Transmitter specifications

Power supply voltage	:	10 to 30 V DC (between transmitter terminals) (intrinsically safe version: 10 to 28 V DC)
Current output	:	4–20 mA DC Effective output range: 4.0 to 21.6 mA. In abnormal conditions, 22.8 mA or 3.75 mA (optional) is output.
Allowable load resistance	:	830 Ω or less for AM3000/E1 series (580 Ω or less/24 V DC) 230 to 830 Ω for AM3000/H1 series (HART communication needs at least 230 Ω) Determine the allowable load resistance for each supply voltage by using the formula: Allowable load resistance ≤ (Power supply voltage [V] – 10) / 0.024 [Ω] The allowable load resistance includes the resistance in the wiring.
Output accuracy	:	±1.0% F.S. (against the flow scale)
Temperature change effect	:	10 μA/℃
Low cut-off	:	0 to 20% F.S. (default: 7% F.S.)
Damping	:	0 to 20 s (default: 1 s)
Cable entry	:	Dust-tight and immersion-proof, intrinsically-safe: M20 × 1.5, G1/2, NPT1/2, waterproof connector Flameproof: M20 × 1.5, NPT1/2, flameproof cable gland Note: For the TIIS flameproof construction, use the EXPC-16B flameproof cable gland (Shimada Electric Co.). The cable diameter is 6 mm to 12 mm (standard: 10 mm to 12 mm).
Construction	:	Dust-tight and immersion-proof: IP67 Intrinsically safe: Ex ia ⅡC T3/T4 (Temperature class of TIIS-certified models is T4, that of NEPSI-certified models is T1 ... T6) Flameproof: Ex db Ⅱ C T3 ... T6 (Temperature class of TIIS-certified models is T4)
Ambient temperature	:	Dust-tight and immersion-proof: –20 to +70℃ Intrinsically safe: –20 to +60℃ Flameproof: –20 to +55℃ (TIIS-certified products) –20 to +60℃ (other certified products)
Insulation resistance	:	20 MΩ or more/500 V DC (between the batch of power supply terminals and the case)
Withstand voltage	:	500 V AC/1 min (between the batch of power supply terminals and the case)

●Dimensions of the indicator/transmitter

Internal tube type (Approx. mass: 1.3 kg)

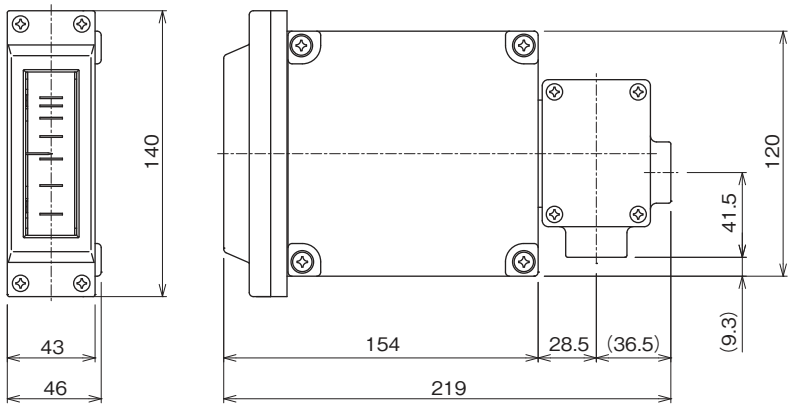

External tube type (Approx. mass: 1.5 kg)

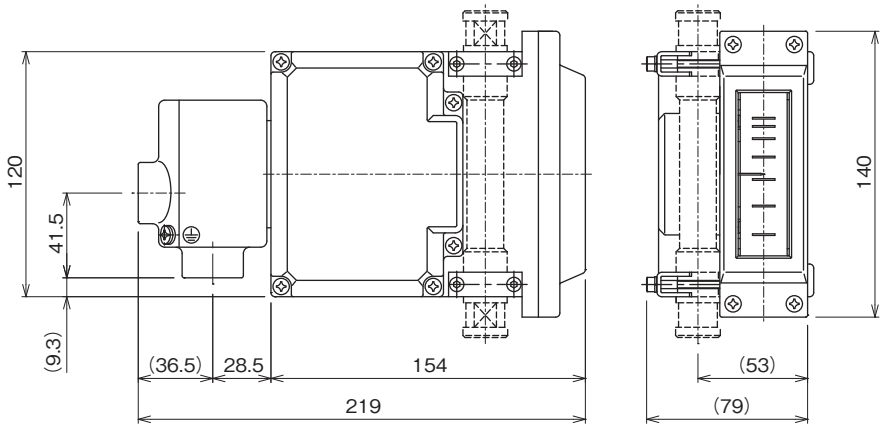

Explosion-proof type (Approx. mass: 2.3 kg)

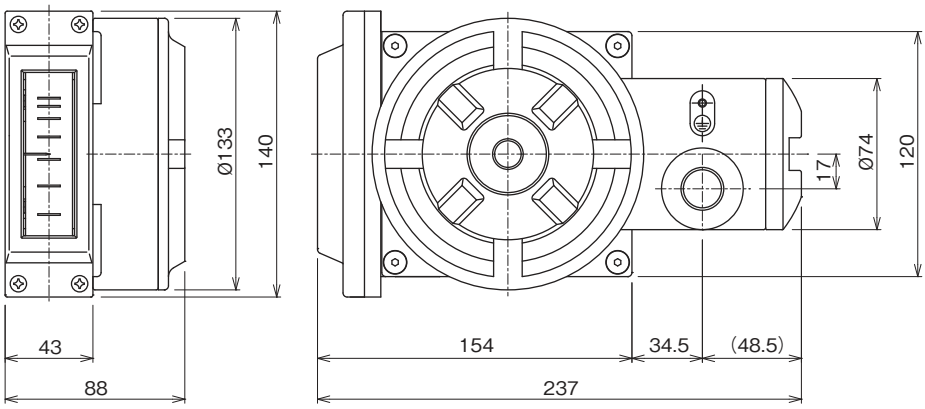

●Terminals and wiring

Internal and external tube types

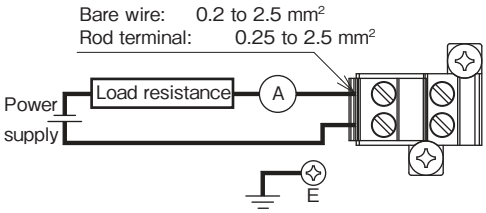

Explosion-proof type

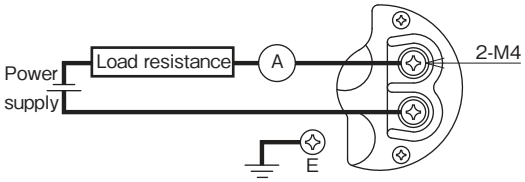

DIMENSIONS

●Internal tube type (screw connection)

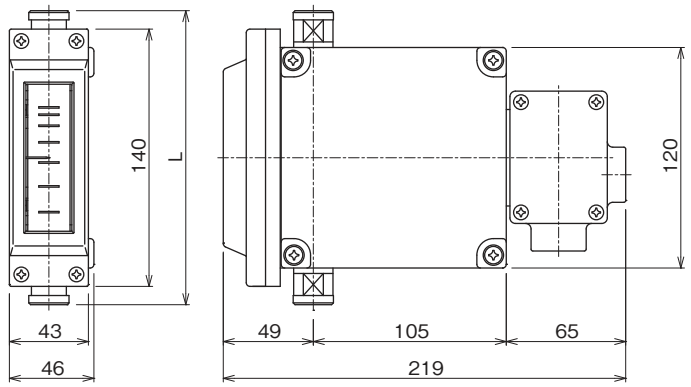

Thread size	1/4	3/8	1/2
L (mm)	180	160	190
Approx. mass (kg)	1.6	1.5	1.7

Note: Screw sockets are provided for 1/4 and 1/2.

●Internal tube type (flange connection)

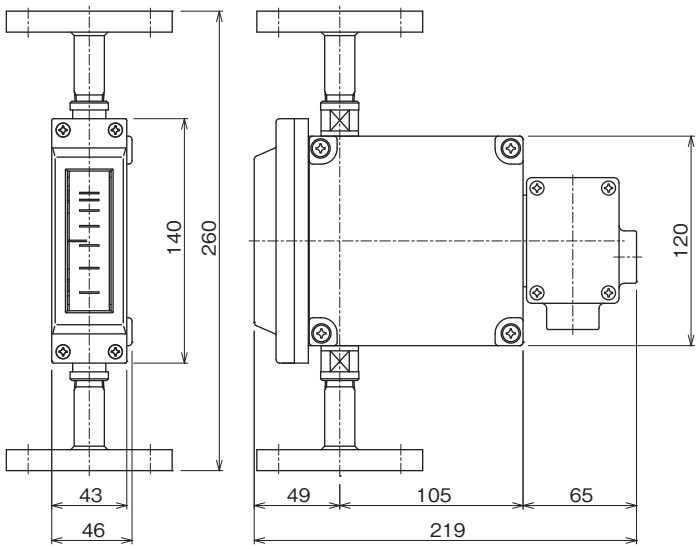

Flange size (mm)	10	15	20	25
Approx. mass (kg) [JIS 10K]	2.6	2.7	3.0	3.8

Note: Thread size of the body: Rc 3/8

●External tube type (screw connection)

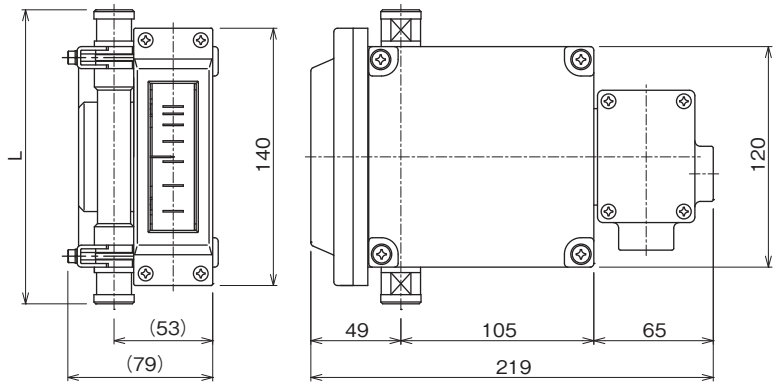

Thread size	1/4	3/8	1/2
L (mm)	180	160	190
Approx. mass (kg)	1.8	1.7	1.9

Note: Screw sockets are provided for 1/4 and 1/2.

●External tube type (flange connection)

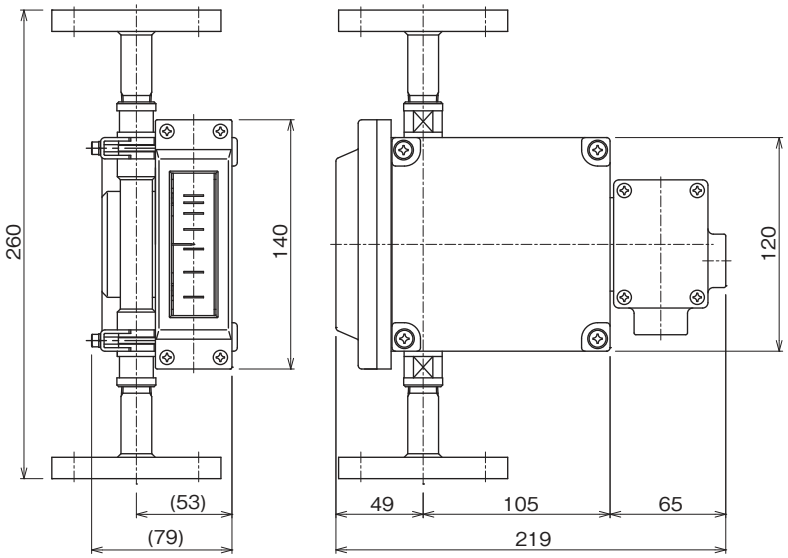

Flange size (mm)	10	15	20	25
Approx. mass (kg) [JIS 10K]	2.8	2.9	3.2	4.0

Note: Thread size of the body: Rc 3/8

●Internal tube/large-flow type (screw connection)

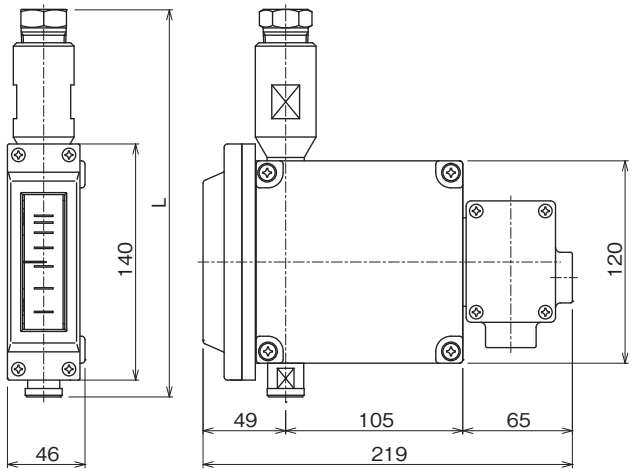

Thread size	3/8	1/2	3/4
L (mm)	230	265	245
Approx. mass (kg)	2.2	2.4	2.4

Note: A gas damper cannot be used with this type. The AM7000 series is recommended.
Note: Thread size of the upper side: Rc 3/8, bottom side: Rc 3/4

●Internal tube/large-flow type (flange connection)

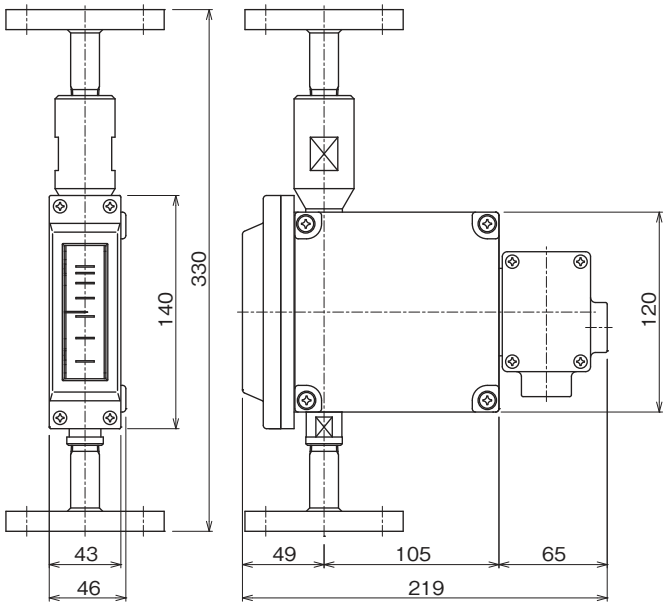

Flange size (mm)	15	20	25
Approx. mass (kg) [JIS 10K]	3.4	3.7	4.5

Note: A gas damper cannot be used with this type. The AM7000 series is recommended.
Note: Thread size of the upper side: Rc 3/8, bottom side: Rc 3/4

AM3□□□/□1/□E (FLAMEPROOF TYPE)

Models with an optional function of current transmission or current transmission+HART® communication satisfy flameproof specifications. Please choose an appropriate class in each standard.

Ex type	Class	Fluid temperature	Ambient temperature
TIIS	Ex d Ⅱ C T4	− 20 to + 135℃	− 20 to + 55℃
NEPSI	Flameproof Ex db Ⅱ C T3 ... T6 Gb Dust explosion-proof Ex tb Ⅲ C T85℃ Db	T3 : up to + 150℃ T4 : up to + 135℃ T5 : up to + 100℃ T6 : up to + 85℃	− 20 to + 60℃
ATEX	Flameproof Ⅱ 2G Ex db Ⅱ C T6 ... T3 Gb Dust explosion-proof Ⅱ 2D Ex tb Ⅲ C T85℃ Db		
KOSHA	Ex d Ⅱ C T6 ... T3		
IEC-Ex	Flameproof Ex db Ⅱ C T6 ... T3 Gb Dust explosion-proof Ex tb Ⅲ C T85℃ Db		

Note: Use a cable gland as shown below for the TIIS flameproof type.

● Cable gland for the TIIS flameproof type (EXPC-16B by Shimada Electric Co.)

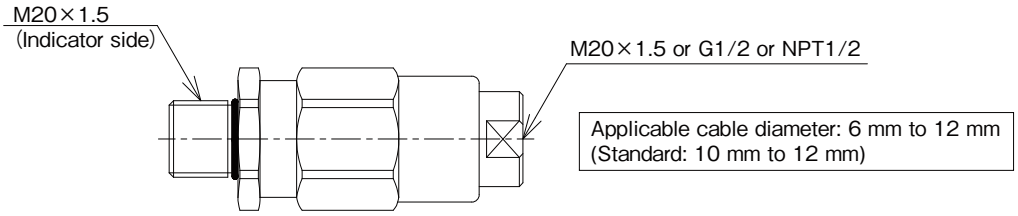

AM3□□□/□1/□I (INTRINSICALLY SAFE TYPE)

Models with an optional function of current transmission or current transmission+HART® communication satisfy intrinsically safe specifications. Please choose an appropriate class in each standard.

Ex type	Class	Fluid temperature	Ambient temperature
TIIS	Ex ia Ⅱ C T4	Internal tube type : up to + 150°C External tube type: up to + 165°C	− 20 to + 60℃
NEPSI	Ex ia Ⅱ C T1 ... T6 Gb	Internal tube type (T3 ... T6): up to + 150°C External tube type (T1 ... T6): up to + 430°C	− 20 to + 60℃
ATEX	Intrinsically safe Ⅱ 2G Ex ia Ⅱ C T3/T4 Gb Dust explosion-proof Ⅱ 2D Ex ia Ⅲ C T150℃ Db	Intrinsically safe Internal tube type (T4): up to + 150°C External tube type (T4): up to + 165°C (T3): up to + 200°C Dust explosion-proof Internal tube type : up to + 150°C External tube type: up to + 200°C	Intrinsically safe − 20 to + 60℃ Dust explosion-proof − 20 to + 50℃
KOSHA	Ex ia Ⅱ C T3/T4	Internal tube type (T4): up to + 150°C External tube type (T4): up to + 165°C (T3): up to + 200°C	− 20 to + 60℃
IEC-Ex	Intrinsically safe Ex ia Ⅱ C T3/T4 Gb Dust explosion-proof Ex ia Ⅲ C T150℃ Db	Intrinsically safe Internal tube type (T4): up to + 150°C External tube type (T4): up to + 165°C (T3): up to + 200°C Dust explosion-proof Internal tube type : up to + 150°C External tube type: up to + 200°C	Intrinsically safe − 20 to + 60℃ Dust explosion-proof − 20 to + 50℃

● Intrinsically safe specifications for an option of current transmission or current transmission+HART® communication

	Rated value
Max. voltage for intrinsically safe circuit	28 V DC less than
Max. current for intrinsically safe circuit	93 mA less than
Max. power consumption for intrinsically safe circuit	650 mW less than
Internal capacitance	5 nF or more
Internal inductance	0.2mH or more

ADDITIONAL SPECIFICATIONS

1. Gas damper (Model AM3000/DU)

A gas damper which requires no damper liquid is available for gas measurement. A mechanical damper consisting of a cylinder and a piston is connected to the float rod bearing.

This type needs no external damping mechanism at the bottom of the flowmeter, and the gas does not restrict flow, which allows flexible piping designs.

Furthermore, there is no need for filling damper liquids, reducing the maintenance work. The gas damper is particularly useful for low-pressure gas applications which may cause hunting of the float and which do not allow damping liquids. A gas damper is highly recommended for applications with a pressure of less than 0.3 MPa and no needle valve at the downstream.

Note that this type of gas damper cannot be used for liquids or condensable vapors. Chlorine gas, which easily combines with other chemicals, or gases containing rust, dust, oil and other materials, could cause the flowmeter to malfunction.

●Gas damper (AM3000/DU) (screw connection)

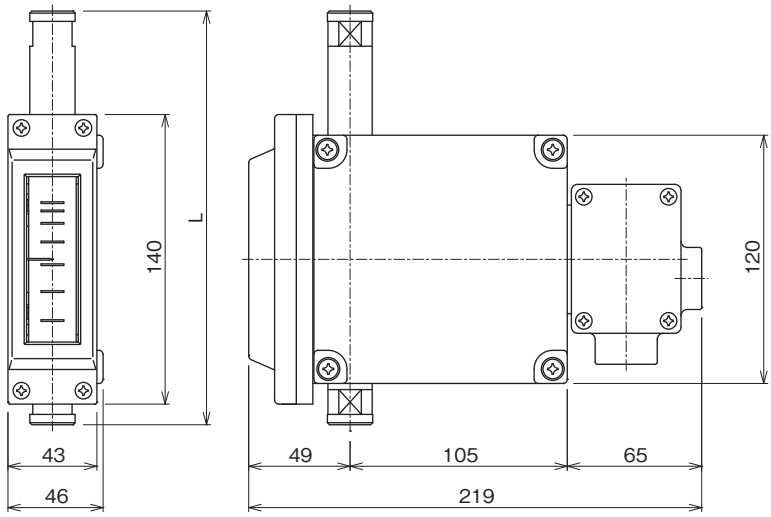

Thread size	1/4	3/8	1/2
L (mm)	220	200	230
Approx. mass (kg)	1.7	1.6	1.8

Note: Screw sockets are provided for 1/4 and 1/2.
Note: The gas damper cannot be used for high-temperature types.

●Gas damper (AM3000/DU) (flange connection)

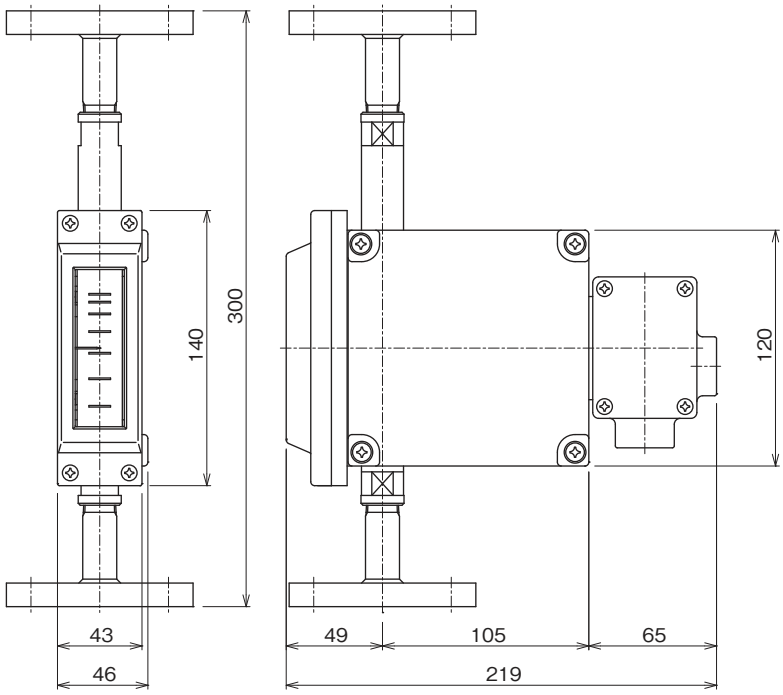

Flange size (mm)	10	15	20	25
Approx. mass (kg) [JIS 10K]	2.7	2.8	3.1	3.9

Note: Screw sockets are provided for 1/4 and 1/2.
Note: The gas damper cannot be used for high-temperature types.
Note: Thread size of the body: Rc 3/8

2. Liquid damper (Model AM3000/DL)

A damper mechanism is required for gas measurement especially in low-pressure applications to prevent hunting of the float.
The damper installed at the bottom of the flowmeter ensures the accuracy and durability of the flowmeter. The damping mechanism reduces abrupt movements of the float by using the resistance generated between the oil in the damper and the damping element connected to the float rod.
The liquid damper is also recommended for liquid applications with pulsating flows.

●Internal tube type (screw connection)

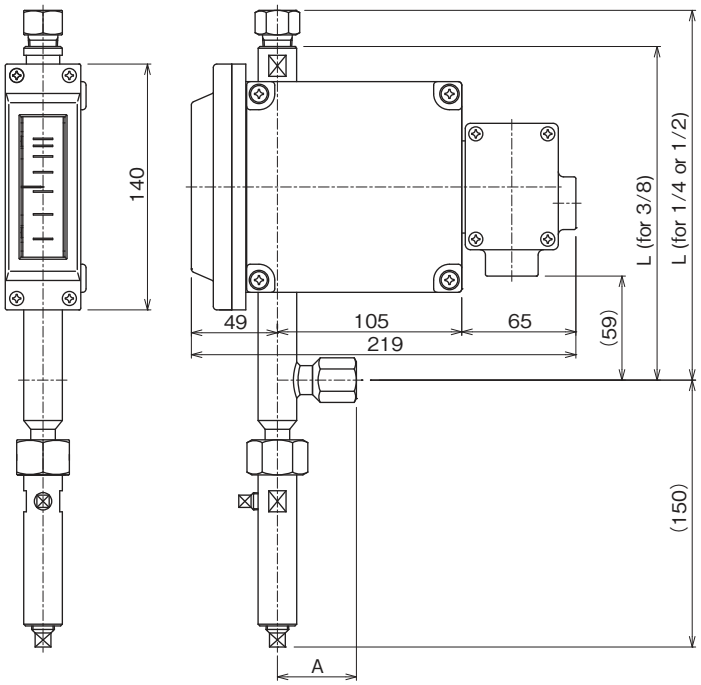

Thread size	1/4	3/8	1/2
L	210	190	215
A	40	45	45
Approx. mass (kg)	2.5	2.5	2.7

Note: Use the cable entry on the back to avoid interference between the piping and conduits.

●Internal tube type (flange connection)

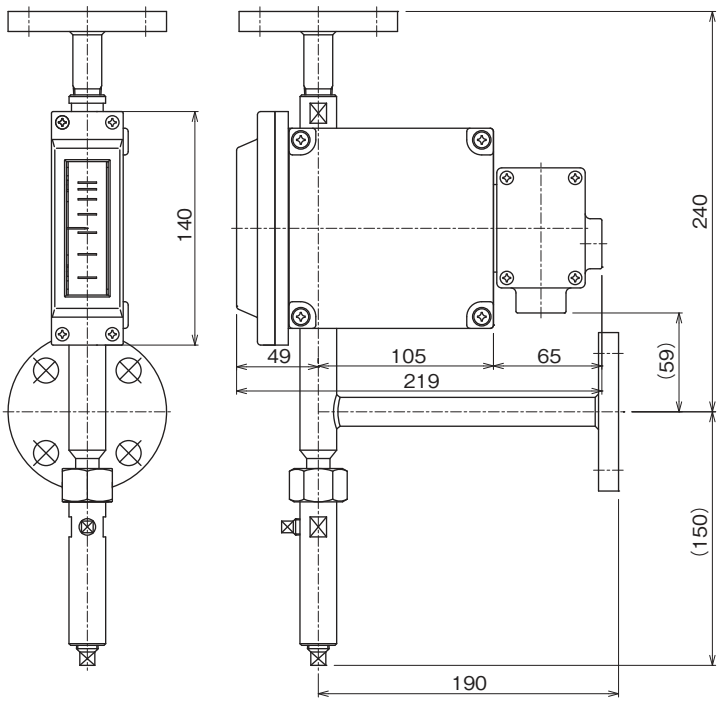

Flange size (mm)	10	15	20	25
Approx. mass (kg) [JIS 10K size]	3.5	3.6	3.9	4.7

Note: Use the cable entry on the back to avoid interference between the piping and conduits.

●External tube/large-flow type (screw connection)

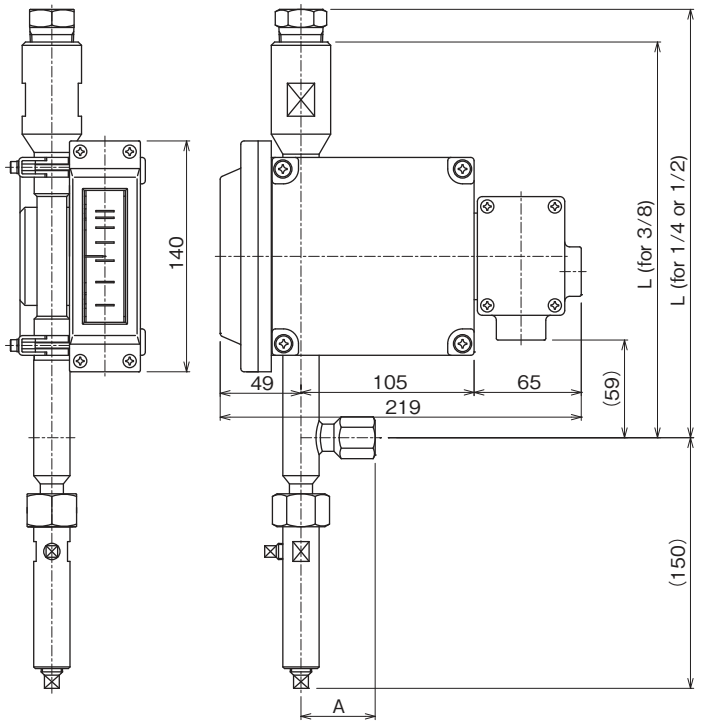

Thread size	3/8	1/2	3/4
L	260	270	240
A	45	45	55
Approx. mass (kg)	3.5	3.7	3.7

Note: Use the cable entry on the back to avoid interference between the piping and conduits.

●External tube/large-flow type (flange connection)

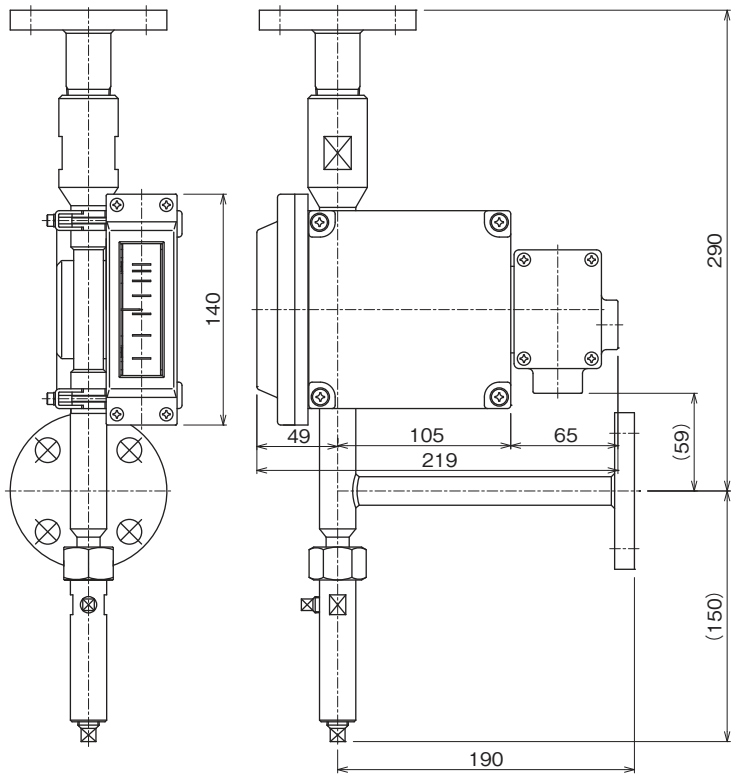

Flange size (mm)	15	20	25
Approx. mass (kg) [JIS 10K]	4.6	4.9	5.7

Note: Use the cable entry on the back to avoid interference between the piping and conduits.

3. Needle valve (Model AM3000/V □)

A needle valve is used to control flow rates. Install one downstream of the flowmeter to avoid hunting of the float in gas measurement. Placing a valve on the upstream side may reduce pulsation in liquid measurement.

● Standard specification

Nominal size	:	Rc3/8
Max. op. pressure	:	3 MPa
Fluid temperature	:	–15 to +150℃
Material	:	SUS316

●Needle valve (AM3000/VU) (screw connection)

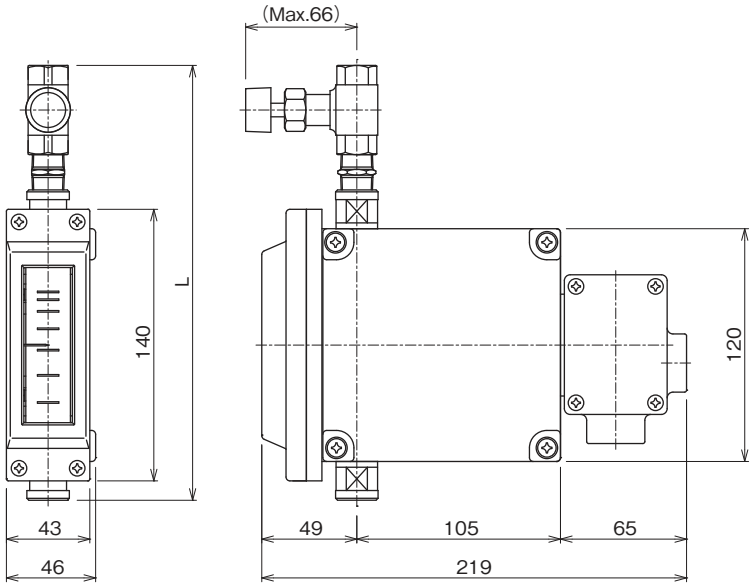

Thread size	1/4	3/8	1/2
L (mm)	245	225	275
Approx. mass (kg)	1.8	1.7	1.9

Note: Screw sockets provided for 1/4 and 1/2.
Note: The length "L" of the flowmeter with a gas damper is 40 mm longer downstream.

●Needle valve (AM3000/VU) (flange connection)

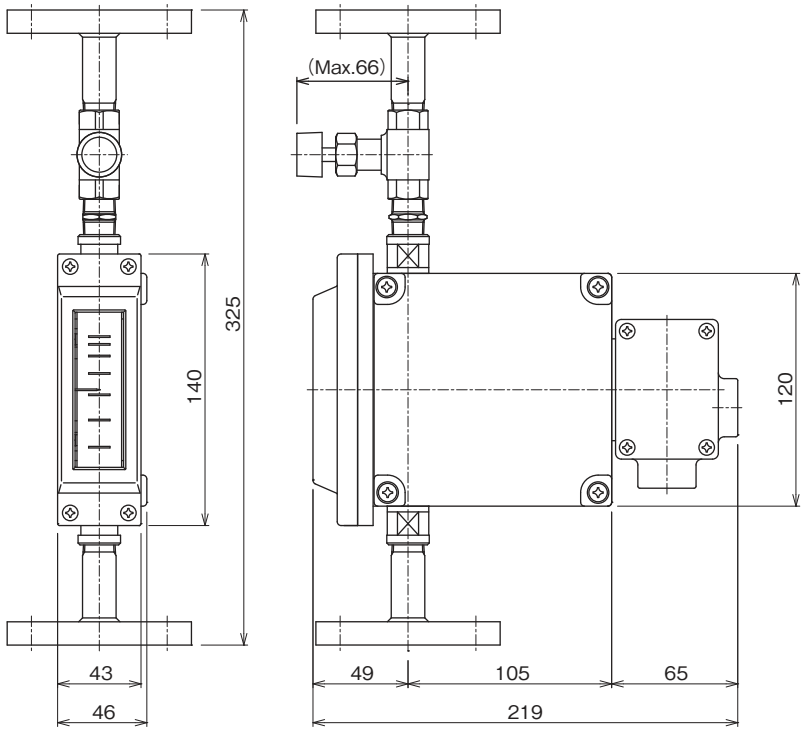

Flange size (mm)	10	15	20	25
Approx. mass (kg) [JIS 10K]	2.8	2.9	3.2	4.0

4. Magnet strainer (Model AM3000/MG)

Iron particles in liquids may be attracted by the magnet in the float and cause the flowmeter to malfunction. To prevent this, install a magnet strainer at the inlet of the flowmeter. The 100 mesh strainer is available as standard (200 mesh is optional).

● Standard specification

Nominal size	: 1/4, 3/8, 1/2
Fluid pressure	: Max. 1.5 MPa
Fluid temperature	: Max. 200℃
Filter	: 100 mesh (standard) 200 mesh (option)
Material	: SUS304, SUS316

●Dimensions of the magnet strainer

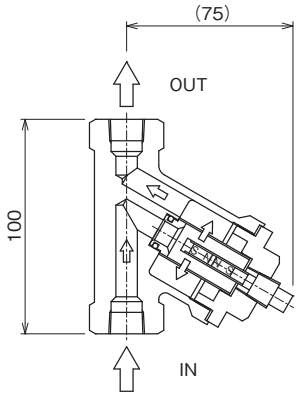

5. Purge set

Combined with a constant flow valve, the AM3000 micro flowmeter keeps flow rates constant even when the primary or secondary pressure fluctuates. For details, see TECHNICAL GUIDANCE of the C series.

6. Panel mounting type (Model AM3000/PN)

The panel mounting type facilitates mounting onto other instruments.
The locations and dimensions of holes for fixing screws and the dimensions of the panel are shown below.
The fixing screws are to be provided by the customer. Select ones appropriate for the thickness of the panel.

●Panel cut dimensions

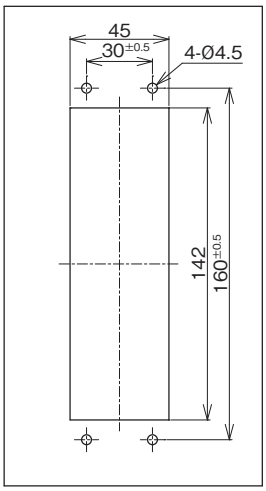

●Panel mounting (side view)

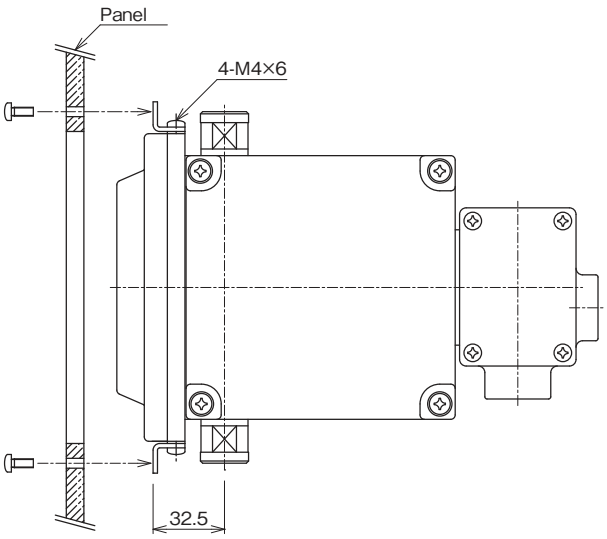

●Panel mounting (front view)

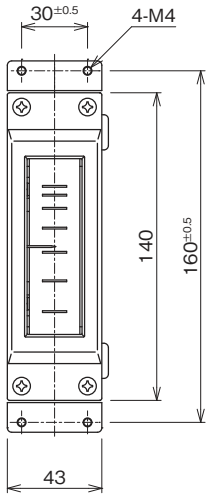

Note: Metal fixtures should not be used for supporting the flowmeter.
Support the flowmeter with other tools so as not to apply any force to the piping tube and wiring connection.

CAUTIONS

- The flowmeter transmits the displacement caused by the magnet coupling. Any other nearby magnetic field might affect the performance of the flowmeter.
  Avoid installing the flowmeter in a magnetic field and do not bring magnetic materials close to it, including insulation covers which may contain magnetic materials.
- When installing two or more flowmeters, install them at least 10 cm apart from each piping to avoid interference.
  For maintenance, ensure a clearance of at least 20 cm between the indicator of one flowmeter and the body of other flowmeters.

STANDARD SCALE GRADUATION

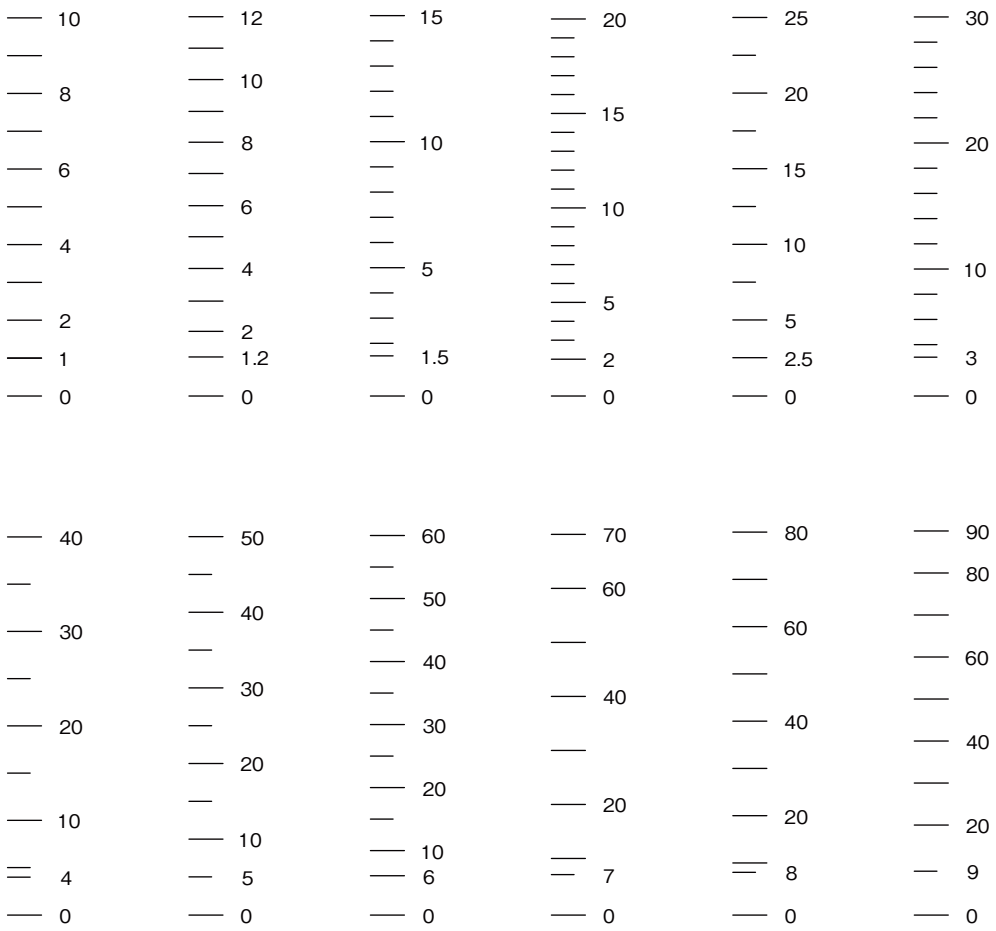

* Specification is subject to change without notice.

TOKYO KEISO CO., LTD.
Head Office : Shiba Toho Building, 1-7-24 Shibakoen, Minato-ku, Tokyo 105-8558
Tel : +81-3-3431-1625 (KEY) ; Fax : +81-3-3433-4922
e-mail : overseas.sales@tokyokeiso.co.jp ; URL : https://www.tokyokeiso.co.jp